Wendy’s at Staples Plaza

One Boland Drive, West Orange, NJ 07052
csglaw.com

JENNIFER M. PORTER
jporter@csglaw.com

O 973.530.2071 F 973.325.1501

September 1, 2022

RECEIVED
PLANNING DEPARTMENT
SEP 1 – 2022
TOWN OF YORKTOWN

Via Overnight Mail & Email – rsteinberg@yorktownny.org
Ms. Robyn A. Steinberg, AICP, CPESC
Town of Yorktown Planning Department
Albert A. Capellini Community & Cultural Center
1974 Commerce Street, Room 222
Yorktown Heights, NY 10598

Re: Preliminary and Final Site Plan Application of
Wenesco Yorktown, LLC
3399 Crompond Road
Section 36.06, Block 2, Lot 76
Yorktown, New York (the "Property")

Dear Ms. Steinberg:

As you know, we represent Wenesco Yorktown, LLC (the "Applicant") with respect to the above referenced application, which is scheduled to be heard at the Planning Board's (the "Board") September 12, 2022 public informational hearing. In furtherance thereof, enclosed please find:

1) Executed Sign Notification Certification together with legible photographic evidence to verify the placement of the required notice sign; and

2) Twenty (20) Notices to Interested Parties together with original USPS Certificate of Mailing, providing evidence that twenty (20) pieces of mail addressed to the Interested Parties were presented to the USPS for mailing.

Thank you for your courtesies extended in this matter. Please feel free to contact me if you have any questions or need any additional information.

We look forward to appearing before the Board at their September 12, 2022 hearing.

Very truly yours,

Jennifer M. Porter /s/
Jennifer M. Porter
Member

JMP:jlv
Enclosures
cc: Nancy Calicchia (via email only ncalicchia@yorktownny.org)

RECEIVED
PLANNING DEPARTMENT
SEP 1 - 2022
TOWN OF YORKTOWN

Sign Notification Certification

Per Section §205-7 of the Town of Yorktown Town Code, every applicant that submits an application to an approval authority empowered to approve or deny said application must post one or more notification signs on the property which is the subject of said application.

Section 36.06 Block 2 Lot 76

Project Name: Proposed Drive-Thru Wendy's Restaurant

Address: 3399 Crompond Road, Yorktown, New York

Applicant's Name: Wenesco Yorktown, LLC

Address: 920 Sylvan Avenue, Suite 120, Englewood Cliffs, NJ 07632

Phone: 201.567.4900

No. Signs Posted: 1

Sign #1 Location: 3399 Crompond Road, Yorktown, New York

Sign #2 Location: _____

Sign #3 Location: _____

- Please Attach and Label Photos on Additional Sheets -

~~Applicant's Signature~~: Danielle Federico

~~Land Owner's Signature~~: Danielle Federico, Esq, Attorney for Applicant

Photo of notice posted in front of the property (3399 Crompound Road)

UNITED STATES POSTAL SERVICE®

Certificate Of Mailing

To pay fee, affix stamps or meter postage here.

This Certificate of Mailing provides evidence that mail has been presented to USPS® for mailing. This form may be used for domestic and international mail.

From:

Jennifer M. Porter, Esq.
Chiesa Shahinian & Giantomasi PC
One Boland Drive
West Orange, NJ 07052
Wenesco Yorktown B2,L76 28233.0002

WEST ORANGE BRANCH
AUG 30 2022
WEST ORANGE, NJ 07052

To:

Postmark Here

PALIOURAS, DIANNE & PANDELIS
2548 PINE GROVE CT.
YORKTOWN HGTS., NY 10598

ADAMO FAMILY REVOCABLE LIVING TRUST
2536 PINE GROVE CT.
YORKTOWN HGTS., NJ 10598

DINAPOLI, RICHARD & CHARISSA
2374 PINE GROVE CT.
YORKTOWN HGTS., NY 10598

PS Form **3817**, April 2007 PSN 7530-02-000-9065

NAZZARO, J
PARTNERSHIP, LP
8 SAXON AVE., STE C
BAY SHORE, NY 11706

O'CONNELL, TIMOTHY & ANDREA
2522 PINE GROVE CT.
YORKTOWN HGTS., NY 10598

MUNNELLY, THOMAS & KACI
1348 LYNN ROAD
YORKTOWN HGTS, NY 10598

OTHER HEIGHTS, LLC.
1430 BROADWAY, SUITE 903
NEW YORK, NY 10018

TEACHOUT, TERRY & JANA
1344 LYNN CT.
YORKTOWN HGTS., NY 10598

RUBENFELD, DAVID & LISA
1356 LYNN CT.
YORKTOWN HGTS., NY 10598

NAZZARO, J
PARTNERSHIP, LP
8 SAXON AVE., STE C
BAY SHORE, NY 11706

RUGOVAJ, JETON
2488 PINE GROVE CT.
YORKTOWN HGTS., NY 10598

MOHINDRA, AJAY REVOCABLE TRUST & MONHINDA, REENA REVOCABLE TRUST
1340 LYNN CT.
YORKTOWN HGTS., NY 10598

UNITED STATES POSTAL SERVICE®

Certificate Of Mailing

To pay fee, affix stamps or meter postage here.

This Certificate of Mailing provides evidence that mail has been presented to USPS® for mailing. This form may be used for domestic and international mail.

From:

Jennifer M. Porter, Esq.
Chiesa Shahinian & Giantomasi PC
One Boland Drive
West Orange, NJ 07052
Wenesco Yorktown B2,L76 28233.0002

WEST ORANGE BRANCH
AUG 30 2022
WEST ORANGE, NJ 07052

Postmark Here

To

UB YORKTOWN, LLC
C/O EXTRA SPACE STROAGE
P.O. BOX 71870
6890 S 2300 E
SALT LAKE CITY, UT 84171

REALTY INCOME
PENN.PROP. TRUST 2
BJ'S WHOLESALE CLUB. INC.
25 RESEARCH DR., RT C2
WESTBOROUGH, MA 01581-5230

KATZ, BARRY & BARRIE
2510 PINE GROVE CT.
YORKTOWN HGTS., NY 10598

PS Form **3817**, April 2007 PSN 7530-02-000-9065

SONG, HONG SUB & JEONG, GRACE
2504 PINE GROVE CT.
YORKTOWN HGTS., NY 10598

MONACO, JOANNE & JACOBY,ANDREA
1336 LYNN CT.
YORKTOWN HGTS., NY 10598

ALFANO, ROBERT & GEORGETTE
2370 PINE GROVE CT.
YORKTOWN HGTS., NY 10598

MILLER, DAVID P.
IRREVOCABLE TRUST
2378 PINE GROVE CT.
YORKTOWN HGTS., NY 10598

CAMI OF WESTCHESTER, INC.
C/O FLORENTINO BALEIRON
631 HIGHLAND AVE.
PEEKSKILL, NY 10566

NOTICE TO INTERESTED PARTIES

TO: PALIOURAS, DIANNE &
PANDELIS
2548 PINE GROVE CT.
YORKTOWN HGTS., NY 10598

PLEASE TAKE NOTICE that a **Public Informational Hearing** will be held by the Planning Board of the Town of Yorktown in Town Hall, 363 Underhill Avenue, Yorktown Heights, New York 10598 on **Monday, September 12, 2022 at 7:00 pm** or as soon thereafter as possible on the following matter:

Application of Wenesco Yorktown, LLC for approval of a site plan with submitted plans titled, "Preliminary & Final Site Plan for Wenesco Yorktown, LLC Proposed Drive-Thru Wendy's Restaurant," prepared by Dynamic Engineering, dated June 27, 2022, and last revised August 4, 2022.

It is proposed renovate the existing building to construct a Wendy's with drive-thru. The site is located at 3399 Crompond Road, Yorktown Heights, also known as Section 36.06, Block 2, Lot 76 on the Town of Yorktown Tax Map.

If any interested members of the public would like to provide comments on this application, written comments can be provided to the Board by mail sent to the Planning Department at 1974 Commerce Street, Yorktown Heights, NY 10598 or by email before the meeting to planning@yorktownny.org. Submitted written comments will be given to the Planning Board in advance of the meeting.

The above listed site plan may be viewed on the Town's website: http://www.yorktownny.org/planning/public-hearings. Please do not hesitate to call the Planning Department at 914-962-6565 with questions or for more information.

ALL PERSONS INTERESTED in the above matter may appear before the Board in person, or virtually if the meeting is held remotely, by agent or attorney and will be heard before any final determination is made.

This notice is being sent to you by regular first-class mail, pursuant to Section '195-39B of the Yorktown Town Code requiring the undersigned to notify all interested parties as defined there under.

Wenesco Yorktown, LLC
Name of Applicant

Chiesa, Shahinian & Giantomasi, PC

By: _____
Jennifer Porter, Esq.
Attorney for Applicant

August 30, 2022
Date

4865-8092-7536.v1

RECEIVED
PLANNING DEPARTMENT
SEP 7 2022
TOWN OF YORKTOWN

Barrie Katz
2510 Pine Grove Ct.
Yorktown, N.Y.
10598
914-260-3511

Regarding: Wenesco Yorktown LLC
Wendy's Restaurant and Drive-Thru

Hi,

I Live behind the Staple's Plaza on the side the Wendy's will be coming in on. We live on Pine Grove Court. I have a concern on the garbage that this restaurant will create. As of now, the garbage has been building up behind the building, the woods between us and the shopping Center. It really is a sore sight. We would like some guarantees that the garbage created will be taken care of daily.

Thank You,

Barrie Katz
2510 Pine Grove Ct.
Yorktown Heights,
N.Y. 10598

CSG law

CHIESA SHAHINIAN & GIANTOMASI PC

One Boland Drive, West Orange, NJ 07052
csglaw.com

JENNIFER M. PORTER
jporter@csglaw.com

O 973.530.2071 F 973.325.1501

August 25, 2022

RECEIVED
PLANNING DEPARTMENT
AUG 25 2022
TOWN OF YORKTOWN

Via Hand Delivery & Email – rsteinberg@yorktownny.org
Ms. Robyn A. Steinberg, AICP, CPESC
Town of Yorktown Planning Department
Albert A. Capellini Community & Cultural Center
1974 Commerce Street, Room 222
Yorktown Heights, NY 10598

Re: Preliminary and Final Site Plan Application of
Wenesco Yorktown, LLC
3399 Crompond Road
Section 36.06, Block 2, Lot 76
Yorktown, New York (the "Property")

Dear Ms. Steinberg:

We represent Wenesco Yorktown, LLC (the "Applicant") with respect to the above referenced application, which is scheduled to be heard at the Planning Board's (the "Board") September 12, 2022 public informational hearing. In furtherance thereof, enclosed please find:

1) Eight (8) copies of the revised Site Plan prepared by Dynamic Engineering Consultants, P.C. dated June 27, 2022, last revised August 4, 2022, and consisting of five (5) sheets; and

2) Eight (8) copies of the revised Architectural Plan Sheets A2.1 and A2.2 prepared by The Chesapeake Design Group Architects, Incorporated dated April 11, 2022 and consisting of two (2) sheets.

As you know, the Applicant is seeking preliminary and final site plan approval to renovate an existing drive-thru and replace it with a Wendy's drive-thru on the Property. In response to comments made by the Board, the Board's professionals and the Advisory Board on Architecture & Community Appearance (ABACA), the Applicant has revised the plans as follows:

- Note 9 on the Site Plan has been revised to include patron and food preparation are for existing and proposed parking calculations.

- A Landscape Plan, Sheet 4, has been added to the Site Plan to screen the freezer/cooler and shortening tank, as well as enhance the existing landscaping within the vicinity of the building and along the site's frontage with Crompond Road.

- The striped areas at either end of the proposed parking striping have been replaced with an expansion of the adjacent landscape islands.

- The building mounted signs, sign details, and sign table have been updated to be consistent with the Architectural Plans.

- Sidewalks were added to the Site Plan to provide access to doors on the exterior of the building and freezer/cooler.

- The color of the HVAC screening was changed on the Architectural Plans to match the Knotwood used on the building.

Thank you for your courtesies extended in this matter. Please feel free to contact me if you have any questions or need any additional information.

We look forward to appearing before the Board at their September 12, 2022 hearing.

Very truly yours,

Jennifer M. Porter /s/

Jennifer M. Porter
Member

JMP:jlv
Enclosures

PRELIMINARY & FINAL SITE PLAN

FOR

WENESCO YORKTOWN, LLC

PROPOSED DRIVE-THRU WENDY'S RESTAURANT

TAX LOT 36.06-2-76

3399 CROMPOND ROAD (U.S. ROUTE 202 / N.Y.S.R. 35)

TOWN OF YORKTOWN, WESTCHESTER COUNTY, NEW YORK

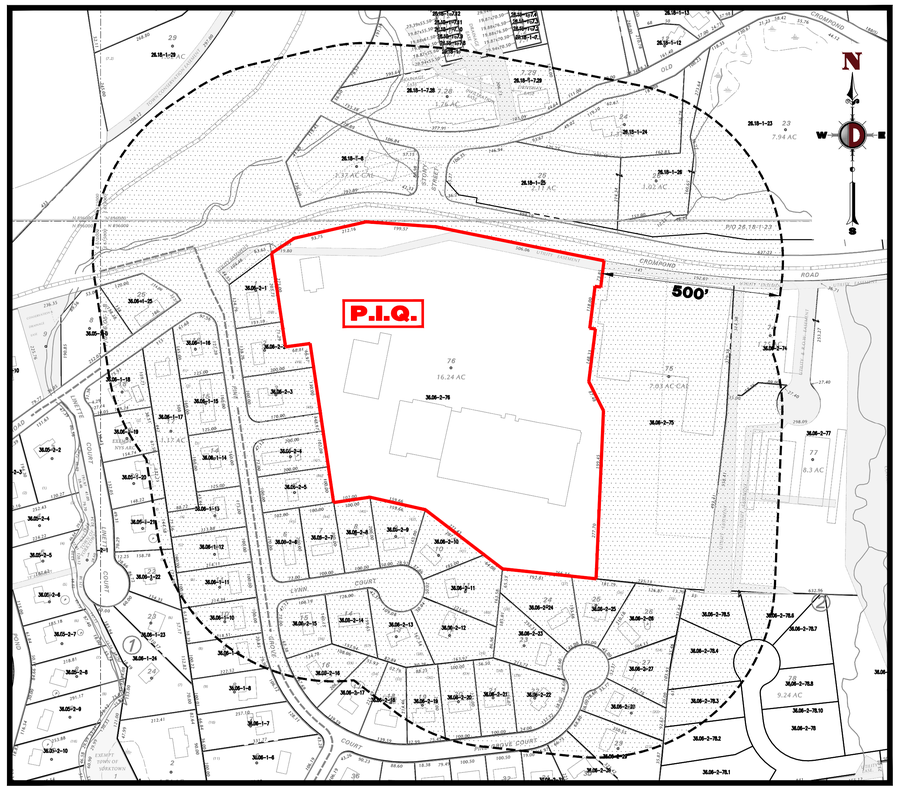

VICINITY MAP

1" = 200'

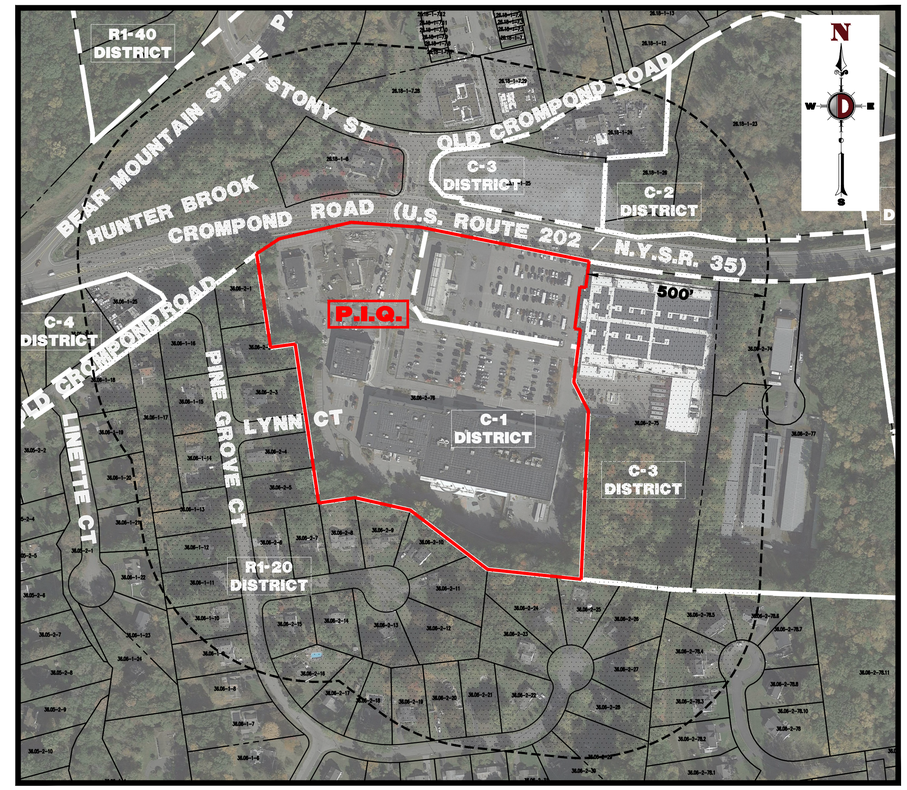

AERIAL MAP

1" = 200'

DRAWING INDEX	
COVER SHEET	1 of 5
SITE PLAN	2 of 5
GRADING, DRAINAGE, AND UTILITY PLAN	3 of 5
LANDSCAPE PLAN	4 of 5
CONSTRUCTION DETAILS	5 of 5

PREPARED BY

DYNAMIC ENGINEERING CONSULTANTS, P.C.

245 MAIN STREET - SUITE 110

CHESTER, NJ 07930

WWW.DYNAMICEC.COM

COPYRIGHT © 2022 - DYNAMIC ENGINEERING CONSULTANTS, PC - ALL RIGHTS RESERVED

Plotted: 08/15/22 – 12:56 PM, By: nicolo
File: F:\DEC\PC PROJECTS\1329 Wenesco Restaurant Systems\99-006 Yorktown NY\Dwg\Site Plans\D1329990006SK1.dwg, ---> 01 COVER SHEET

DYNAMIC ENGINEERING CONSULTANTS • LAND DEVELOPMENT • SURVEY • TRAFFIC

REV.	DATE	COMMENTS	BY
1	08/04/22	REVISED PER PLANNING BOARD COMMENTS	NPL

THIS PLAN SET IS FOR PERMITTING PURPOSES ONLY AND MAY NOT BE USED FOR CONSTRUCTION

DRAWN BY: NPL | DESIGNED BY: NPL | CHECKED BY: DTS | CHECKED BY: _

PROJECT: WENESCO YORKTOWN, LLC
PROPOSED DRIVE-THRU WENDY'S RESTAURANT
TAX LOT 36.06-2-76
3399 CROMPOND ROAD (US ROUTE 202 / N.Y.S.R. 35)
TOWN OF YORKTOWN, WESTCHESTER COUNTY, NEW YORK

811 Know what's below. Call before you dig.

PROTECT YOURSELF

ALL STATES REQUIRE NOTIFICATION OF EXCAVATORS, DESIGNERS, OR ANY PERSON PREPARING TO DISTURB THE EARTH'S SURFACE ANYWHERE IN ANY STATE

FOR STATE SPECIFIC DIRECT PHONE NUMBERS VISIT: WWW.CALL811.COM

DYNAMIC ENGINEERING

LAND DEVELOPMENT CONSULTING • PERMITTING
GEOTECHNICAL • ENVIRONMENTAL
TRAFFIC • SURVEY • PLANNING & ZONING

245 Main Street, Suite 110
Chester, NJ 07930
T: 908.879.9229 | F: 908.879.0222

Offices conveniently located at:
Lake Como, New Jersey • T: 732.974.0198
Chester, New Jersey • T: 908.879.9229
Neiwark, New Jersey • T: 973.733.7200
Toms River, New Jersey • T: 732.478.9300
Newtown, Pennsylvania • T: 267.685.0275
Philadelphia, Pennsylvania • T: 215.735.4800
Bethlehem, Pennsylvania • T: 610.395.4400
Allen, Texas • T: 972.324.2100
Houston, Texas • T: 281.799.1400
Austin, Texas • T: 512.646.9949
Delray Beach, Florida • T: 561.921.8570

www.dynamicec.com

DANIEL T. SEHNAL
PROFESSIONAL ENGINEER
NEW YORK LICENSE No. 099106

JOSEPH G. JAWORSKI
PROFESSIONAL ENGINEER
NEW YORK LICENSE No. 075707

TITLE: COVER SHEET

SCALE: (H) AS (V) SHOWN | DATE: 06/27/2022

PROJECT No: 1329-99-006

SHEET No: 1 OF 5 | Rev. #: 1

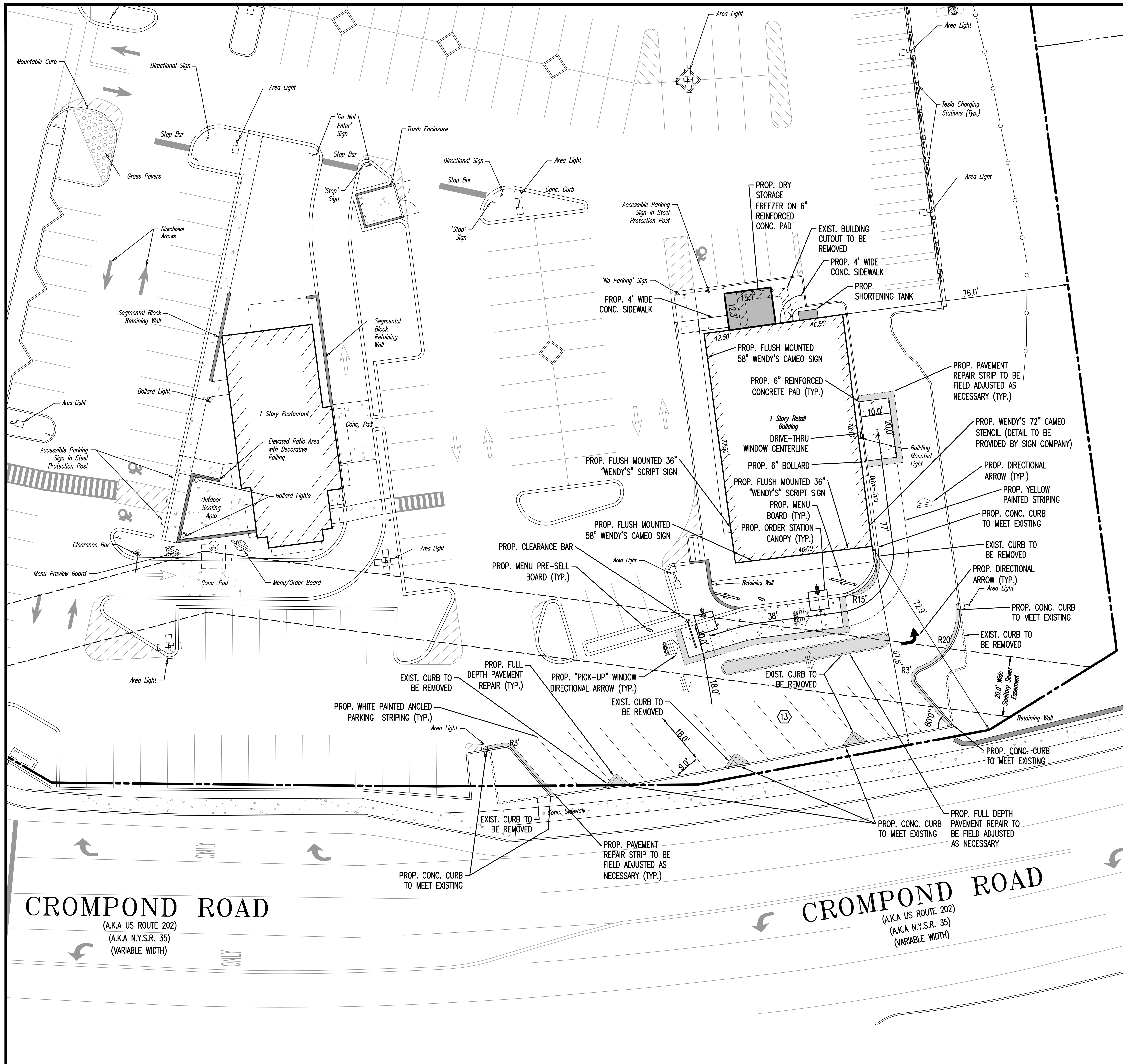

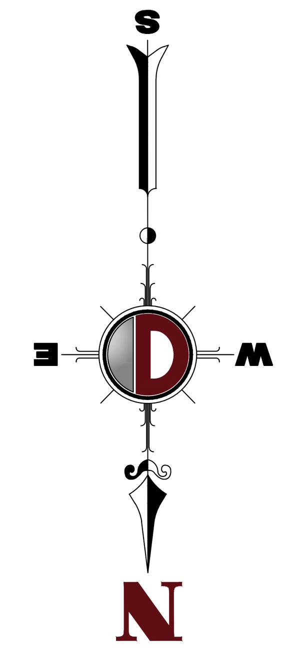

GENERAL NOTES:

1. THIS PLAN HAS BEEN PREPARED BASED ON REFERENCES INCLUDING:

   SITE PLAN APPROVAL DRAWINGS
   JMC SITE PLANNER, CIVIL & TRAFFIC ENGINEERS & LANDSCAPE ARCHITECTS
   120 BEDFORD ROAD
   ARMONK, NEW YORK 10504
   DATED: 10/08/2014; REVISED: 10/24/2018

   WENDY'S CONVERSION NEW BUILD
   THE CHESAPEAKE DESIGN GROUP
   419 NORTH CHARLES STREET
   BALTIMORE, MARYLAND 21201
   DATED: 04/11/2022

2. APPLICANT: WENESCO YORKTOWN, LLC
   910 SYLVAN AVENUE, SUITE 150
   ENGLEWOOD CLIFFS, NJ 07632

3. OWNER: UB YORKTOWN, LLC
   321 RAILROAD AVENUE
   GREENWICH, CT 06830

4. PARCEL DATA: 3399 CROMPOND ROAD (US ROUTE 202 / N.Y.S.R. 35)
   TAX LOT 36.06-2-76
   TOWN OF YORKTOWN
   WESTCHESTER COUNTY, NEW YORK

5. ZONE: C-1 (COMMERCIAL SHOPPING CENTER)

6. EXISTING USE: DRIVE-THRU RESTAURANT **(PERMITTED USE)** (§ 300-21)

7. PROPOSED USE: DRIVE-THRU RESTAURANT **(PERMITTED USE)** (§ 300-21)

8. SCHEDULE OF ZONING REQUIREMENTS (§300 - ATTACHMENT 2):

ZONE REQUIREMENT	C-1 DISTRICT	EXISTING	PROPOSED
MINIMUM LOT AREA	80,000 SF	694,780 SF (15.95 Ac)	694,780 SF (15.95 Ac)
MINIMUM LOT WIDTH	175'	790'	790'
MINIMUM LOT FRONTAGE	175'	963'	963'
MINIMUM LOT DEPTH	175'	850'	850'
MINIMUM FRONT YARD SETBACK	75'	67.6' (DUNKIN') (E)	67.6 (WENDY'S) (E)
MINIMUM REAR YARD SETBACK	75'**	97.3' (STAPLES)	97.3' (STAPLES)
MINIMUM SIDE YARD SETBACK	N/A*	11.2' (BJ'S)	11.2' (BJ'S)
MAXIMUM BUILDING HEIGHT	30'	+/- 20' (1 STORY)	+/- 20' (1 STORY)
MAXIMUM LOT COVERAGE (BY BUILDINGS & CANOPIES)	30%	16.5%	16.5%
MINIMUM UNOCCUPIED OPEN SPACE	N/S	21.3%	21.2%
MAXIMUM IMPERVIOUS COVERAGE	N/S	78.7%	78.8%

N/S: NO STANDARD N/A: NOT APPLICABLE (E): EXISTING NON-CONFORMANCE (V): VARIANCE
*NONE, BUT IF PROVIDED SHALL BE 10 FEET; IF USED AS ONE-WAY VEHICULAR ACCESS, SHALL BE 17 FEET; TWO-WAY VEHICULAR ACCESS, 25 FEET; IF ADJOINS AN R DISTRICT, SHALL BE 50 FEET.
**30 FEET; IF ADJOINS R DISTRICT, 75 FEET

9. PARKING REQUIREMENTS
   A. §300-182 RESTAURANT OR PLACE DISPENCING FOOD OR DRINK:
      ONE SPACE FOR EACH 50 SQUARE FEET OF FLOOR AREA DEVOTED TO PATRON USE
      ONE SPACE FOR EACH 100 SQUARE FEET OF FOOD PREPARATION AND ANCILLARY USE

   B. §300-182 RETAIL USE:
      ONE SPACE PER 250 SQUARE FEET OF GROSS FLOOR AREA

   C. §300-182 URGENT CARE FACILITY:
      6 SPACES PER 1,000 SQUARE FEET OF GROSS FLOOR AREA

   D. §300-182 GASOLINE FILLING STATION:
      ONE SPACE PER 2 EMPLOYEES

   E. §300-182 BASEMENT LEVEL PARKING:
      NO STANDARD IDENTIFIED
      17 REQUIRED

   F. EXISTING PARKING CALCULATION:

      (3,420 SF OF FOOD PREPARATION AND ANCILLARY USE)*(1 PARKING SPACE/100 SF) = 35 SPACES
      (2,473 SF OF PATRON USE)*(1 PARKING SPACE/50 SF) = 50 SPACES
      (5,000 SF OF URGENT CARE USE)*(6 PARKING SPACES/1,000 SF) = 30 SPACES
      (210,984 OF SHOPPING CENTER / RETAIL)*(1 PARKING SPACE/250 SF) = 844 SPACES
      (2 GASOLINE FILLING STATION EMPLOYEES)*(1 SPACE/2 EMPLOYEES) = 1 SPACE
      17 BASEMENT LEVEL PARKING

      TOTAL PARKING REQUIRED = 977 SPACES
      TOTAL PARKING PREVIOUSLY APPROVED = 942 SPACES
      TOTAL PARKING EXISTING = 942 SPACES

   G. PROPOSED PARKING CALCULATION:

      (3,076 SF OF FOOD PREPARATION AND ANCILLARY USE)*(1 PARKING SPACE/100 SF) = 31 SPACES
      (2,817 SF OF PATRON USE)*(1 PARKING SPACE/50 SF) = 57 SPACES
      (5,000 SF OF URGENT CARE USE)*(6 PARKING SPACES/1,000 SF) = 30 SPACES
      (210,984 OF SHOPPING CENTER / RETAIL)*(1 PARKING SPACE/250 SF) = 844 SPACES
      (2 GASOLINE FILLING STATION EMPLOYEES)*(1 SPACE/2 EMPLOYEES) = 1 SPACE
      17 BASEMENT LEVEL PARKING

      TOTAL PARKING REQUIRED = 980 SPACES
      TOTAL PARKING EXISTING = 942 SPACES
      TOTAL PARKING PROPOSED = 936 SPACES **(V)**

10. LOADING REQUIREMENTS
    A. §300-186 FOR RESTAURANTS ONE SPACE FOR THE FIRST 4,000 SQUARE FEET OF FLOOR AREA OR MAJOR PORTION THEREOF USED FOR SUCH PURPOSE AND ONE ADDITIONAL SPACE FOR EACH 40,000 SQUARE FEET OR MAJOR PORTION THEREOF IN EXCESS OF 4,000 SQUARE FEET. (E)
11. THE APPLICANT REQUESTS ANY AND ALL SUBMISSION WAIVERS THAT ARE NOT SPECIFICALLY IDENTIFIED HEREIN. TESTIMONY WILL BE SUPPLIED AT THE PUBLIC HEARING TO SUPPORT SAID SUBMISSION WAIVERS.
12. PRIOR TO STARTING CONSTRUCTION, THE CONTRACTOR SHALL BE RESPONSIBLE TO MAKE SURE THAT ALL REQUIRED PERMITS AND APPROVALS HAVE BEEN OBTAINED. NO CONSTRUCTION OR FABRICATION SHALL BEGIN UNTIL THE CONTRACTOR HAS RECEIVED AND THOROUGHLY REVIEWED ALL PLANS AND OTHER DOCUMENTS BY ALL OF THE PERMITTING AUTHORITIES.
13. ALL WORK SHALL BE PERFORMED IN ACCORDANCE WITH THESE PLANS AND SPECIFICATIONS AND THE REQUIREMENTS AND STANDARDS OF THE LOCAL GOVERNING AUTHORITY.
14. SITE CLEARING SHALL INCLUDE THE LOCATION AND REMOVAL OF ALL UNDERGROUND TANKS, PIPES, VALVES, ETC.
15. ALL DIMENSIONS SHOWN ON THE PLANS SHALL BE FIELD VERIFIED BY THE CONTRACTOR PRIOR TO CONSTRUCTION. CONTRACTOR SHALL NOTIFY ENGINEER IF ANY DISCREPANCIES EXIST PRIOR TO PROCEEDING WITH CONSTRUCTION FOR NECESSARY PLAN CHANGES. NO EXTRA COMPENSATION SHALL BE PAID TO THE CONTRACTOR FOR WORK HAVING TO BE REDONE DUE TO DIMENSIONS OR GRADES SHOWN INCORRECTLY ON THESE PLANS IF SUCH NOTIFICATION HAS NOT BEEN GIVEN.
16. SOLID WASTE TO BE DISPOSED OF BY CONTRACTOR IN ACCORDANCE WITH ALL LOCAL, STATE AND FEDERAL REGULATIONS.
17. ALL EXCAVATED UNSUITABLE MATERIAL MUST BE TRANSPORTED TO AN APPROVED DISPOSAL LOCATION.
18. CONTRACTOR IS RESPONSIBLE FOR ALL SHORING REQUIRED DURING EXCAVATION AND SHALL BE PERFORMED IN ACCORDANCE WITH CURRENT OSHA STANDARDS, AS WELL AS ADDITIONAL PROVISIONS TO ASSURE STABILITY OF CONTIGUOUS STRUCTURES, AS FIELD CONDITIONS DICTATE.
19. ALL CONTRACTORS MUST CARRY STATUTORY WORKERS COMPENSATION, EMPLOYERS LIABILITY INSURANCE AND APPROPRIATE LIMITS OF COMMERCIAL GENERAL LIABILITY INSURANCE (CGL). ALL CONTRACTORS MUST HAVE THEIR CGL POLICIES ENDORSED TO NAME DYNAMIC ENGINEERING CONSULTANTS, P.C. , ITS SUBCONSULTANTS AS ADDITIONAL INSURED AND TO PROVIDE CONTRACTUAL LIABILITY COVERAGE SUFFICIENT TO INSURE THE HOLD HARMLESS AND INDEMNITY OBLIGATIONS ASSUMED BY THE CONTRACTORS. ALL CONTRACTORS MUST FURNISH DYNAMIC ENGINEERING CONSULTANTS, P.C. WITH CERTIFICATES OF INSURANCE AS EVIDENCE OF THE REQUIRED INSURANCE PRIOR TO COMMENCING WORK AND UPON RENEWAL OF EACH POLICY DURING THE ENTIRE PERIOD OF CONSTRUCTION. IN ADDITION, ALL CONTRACTORS WILL, TO THE FULLEST EXTENT PERMITTED BY LAW, INDEMNIFY AND HOLD HARMLESS DYNAMIC ENGINEERING CONSULTANTS, P.C. AND ITS SUBCONSULTANTS FROM AND AGAINST ANY DAMAGES, LIABILITIES OR COSTS, INCLUDING REASONABLE ATTORNEYS' FEES AND DEFENSE COSTS, ARISING OUT OF OR IN ANY WAY CONNECTED WITH THE PROJECT, INCLUDING ALL CLAIMS BY EMPLOYEES OF THE CONTRACTORS.
20. NEITHER THE PROFESSIONAL ACTIVITIES OF DYNAMIC ENGINEERING CONSULTANTS, P.C., NOR THE PRESENCE OF DYNAMIC ENGINEERING CONSULTANTS, P.C. OR ITS EMPLOYEES AND SUBCONSULTANTS AT A CONSTRUCTION/PROJECT SITE, SHALL RELIEVE THE GENERAL CONTRACTOR OF ITS OBLIGATIONS, DUTIES AND RESPONSIBILITIES INCLUDING, BUT NOT LIMITED TO, CONSTRUCTION MEANS, METHODS, SEQUENCE, TECHNIQUES OR PROCEDURES NECESSARY FOR PERFORMING, SUPERINTENDING AND COORDINATING THE WORK IN ACCORDANCE WITH THE CONTRACT DOCUMENTS AND ANY HEALTH OR SAFETY PRECAUTIONS REQUIRED BY ANY REGULATORY AGENCIES. DYNAMIC ENGINEERING CONSULTANTS, P.C. AND ITS PERSONNEL HAVE NO AUTHORITY TO EXERCISE ANY CONTROL OVER ANY CONSTRUCTION CONTRACTOR OR ITS EMPLOYEES IN CONNECTION WITH THEIR WORK OR ANY HEALTH OR SAFETY PROGRAMS OR PROCEDURES. THE GENERAL CONTRACTOR SHALL BE SOLELY RESPONSIBLE FOR JOBSITE SAFETY. DYNAMIC ENGINEERING CONSULTANTS, P.C. SHALL BE INDEMNIFIED BY THE GENERAL CONTRACTOR AND SHALL BE MADE ADDITIONAL INSURED UNDER THE GENERAL CONTRACTOR'S POLICIES OF GENERAL LIABILITY INSURANCE.
21. DYNAMIC ENGINEERING CONSULTANTS, P.C. SHALL REVIEW AND APPROVE OR TAKE OTHER APPROPRIATE ACTION ON THE CONTRACTOR SUBMITTALS, SUCH AS SHOP DRAWINGS, PRODUCT DATA, SAMPLES AND OTHER DATA, WHICH THE CONTRACTOR IS REQUIRED TO SUBMIT, BUT ONLY FOR THE LIMITED PURPOSE OF CHECKING FOR CONFORMANCE WITH THE DESIGN CONCEPT AND THE INFORMATION SHOWN IN THE CONSTRUCTION MEANS OR METHODS, COORDINATION OF THE WORK WITH OTHER TRADES OR CONSTRUCTION SAFETY PRECAUTIONS, ALL OF WHICH ARE THE SOLE RESPONSIBILITY OF THE CONTRACTOR. DYNAMIC ENGINEERING'S REVIEW SHALL BE CONDUCTED WITH REASONABLE PROMPTNESS WHILE ALLOWING SUFFICIENT TIME TO PERMIT ADEQUATE REVIEW. REVIEW OF A SPECIFIC ITEM SHALL NOT INDICATE THAT DYNAMIC ENGINEERING CONSULTANTS, P.C. HAS REVIEWED THE ENTIRE ASSEMBLY OF WHICH THE ITEM IS A COMPONENT. DYNAMIC ENGINEERING CONSULTANTS, P.C. SHALL NOT BE RESPONSIBLE FOR ANY DEVIATIONS FROM THE CONSTRUCTION DOCUMENTS NOT BROUGHT TO THE ATTENTION OF DYNAMIC ENGINEERING CONSULTANTS, P.C. IN WRITING BY THE CONTRACTOR. DYNAMIC ENGINEERING CONSULTANTS, P.C. SHALL NOT BE REQUIRED TO REVIEW PARTIAL SUBMISSIONS OR THOSE FOR WHICH SUBMISSIONS OF CORRELATED ITEMS HAVE NOT BEEN RECEIVED.
22. IN AN EFFORT TO RESOLVE ANY CONFLICTS THAT ARISE DURING THE DESIGN AND CONSTRUCTION OF THE PROJECT OR FOLLOWING THE COMPLETION OF THE PROJECT, DYNAMIC ENGINEERING CONSULTANTS, P.C. AND THE CONTRACTOR MUST AGREE THAT ALL DISPUTES BETWEEN THEM ARISING OUT OF OR RELATING TO THIS AGREEMENT OR THE PROJECT SHALL BE SUBMITTED TO NONBINDING MEDIATION UNLESS THE PARTIES MUTUALLY AGREE OTHERWISE.
23. THE CONTRACTOR MUST INCLUDE A MEDIATION PROVISION IN ALL AGREEMENTS WITH INDEPENDENT SUBCONTRACTORS AND CONSULTANTS RETAINED FOR THE PROJECT AND TO REQUIRE ALL INDEPENDENT CONTRACTORS AND CONSULTANTS ALSO TO INCLUDE A SIMILAR MEDIATION PROVISION IN ALL AGREEMENTS WITH THEIR SUBCONTRACTORS, SUBCONSULTANTS, SUPPLIERS AND FABRICATORS, THEREBY PROVIDING FOR MEDIATION AS THE PRIMARY METHOD FOR DISPUTE RESOLUTION BETWEEN THE PARTIES TO ALL THOSE AGREEMENTS.
24. IF THE CONTRACTOR DEVIATES FROM THE PLANS AND SPECIFICATIONS, INCLUDING THE NOTES CONTAINED THEREON, WITHOUT FIRST OBTAINING PRIOR WRITTEN AUTHORIZATION FOR SUCH DEVIATIONS FROM THE OWNER AND ENGINEER, IT SHALL BE RESPONSIBLE FOR THE PAYMENT OF ALL COSTS TO CORRECT ANY WORK DONE, ALL FINES OR PENALTIES ASSESSED WITH RESPECT THERETO AND ALL COMPENSATORY OR PUNITIVE DAMAGES RESULTING THEREFROM AND IT SHALL INDEMNIFY AND HOLD THE OWNER AND ENGINEER HARMLESS FROM ALL SUCH COSTS TO CONNECT ANY SUCH WORK AND FROM ALL SUCH FINES AND PENALTIES, COMPENSATION AND PUNITIVE DAMAGES AND COSTS OF ANY NATURE RESULTING THEREFROM.
25. ALL TRAFFIC SIGNS AND STRIPING SHALL FOLLOW THE REQUIREMENTS SPECIFIED IN THE MANUAL ON "UNIFORM TRAFFIC CONTROL DEVICES FOR STREETS AND HIGHWAYS" PUBLISHED BY THE FEDERAL HIGHWAY ADMINISTRATION.
26. THE BUILDING SETBACK DIMENSIONS ILLUSTRATED AND LISTED ON THE SITE PLAN DRAWINGS ARE MEASURED FROM THE OUTSIDE SURFACE OF BUILDING WALLS. THESE SETBACK DIMENSIONS DO NOT ACCOUNT FOR ROOF OVERHANGS, ORNAMENTAL ELEMENTS, SIGNAGE OR OTHER EXTERIOR EXTENSIONS UNLESS SPECIFICALLY NOTED.
27. CONTRACTOR TO BE ADVISED THAT THE ENGINEER WAS NOT PROVIDED WITH FINAL FLOOR PLAN DRAWINGS FOR THE BUILDING AT THE TIME OF SITE PLAN DESIGN. AS A RESULT, ENTRANCE DOOR LOCATIONS AS DEPICTED HEREON MAY NOT BE FINAL AND MUST BE CONFIRMED WITH THE ARCHITECTURAL PLANS PRIOR TO CONSTRUCTION. THE HANDICAP ACCESSIBLE PARKING SPACES AND THE ASSOCIATED RAMPS AND ACCESSIBLE ROUTE MUST COMPLY WITH NJAC 5:23-7 AND THE HANDICAP PARKING SPACES MUST BE LOCATED AS THE NEAREST SPACES TO THE ENTRANCE. CONTRACTOR TO NOTIFY OWNER AND ENGINEER IMMEDIATELY OF ANY DISCREPANCY PRIOR TO CONSTRUCTION.

SIGN TABLE

SIGN	REQUIREMENTS		EXISTING		PROPOSED	
BUILDING MOUNTED	NUMBER OF BUILDING MOUNTED SIGNS	N/S	NUMBER OF SIGNS:	6	NUMBER OF SIGNS:	5
	MAXIMUM BUILDING MOUNTED SIGN AREA:	46 SF*	SIGN AREA:		SIGN AREA:	
			NORTH FACADE:		NORTH FACADE:	
			"DUNKIN' DONUTS" SIGN	+/- 20 SF	"WENDY'S" SCRIPT SIGN	21.5 SF
			"BASKIN ROBBINS" SIGN	+/- 25 SF	58" WENDY'S CAMEO SIGN	29.3 SF
			"NEW YORK PIZZA" SIGN	+/- 25 SF		
			TOTAL FACADE BUILDING MOUNTED SIGN AREA:	+/- 70 SF	TOTAL FACADE BUILDING MOUNTED SIGN AREA:	50.8 SF
			EAST FACADE:		EAST FACADE:	
			"DUNKIN' DONUTS" SIGN	+/- 20 SF	"WENDY'S" SCRIPT SIGN	21.5 SF
			"BASKIN ROBBINS" SIGN	+/- 25 SF	58" WENDY'S CAMEO SIGN	29.3 SF
			"NEW YORK PIZZA" SIGN	+/- 25 SF		
			TOTAL FACADE BUILDING MOUNTED SIGN AREA:	+/- 70 SF	TOTAL FACADE BUILDING MOUNTED SIGN AREA:	50.8 SF
			WEST FACADE:		WEST FACADE:	
					"WENDY'S" CAMEO STENCIL	39.1 SF
			TOTAL FACADE BUILDING MOUNTED SIGN AREA:	0 SF	TOTAL FACADE BUILDING MOUNTED SIGN AREA:	39.1 SF
			TOTAL APPROVED BUILDING MOUNTED SIGN AREA:	225.6 SF **(VG)**	TOTAL BUILDING MOUNTED SIGN AREA:	140.7 SF **(VG)**

N/S: NO STANDARD N/A: NOT APPLICABLE (E): EXISTING NON-CONFORMANCE (V): VARIANCE
*1 SQUARE FOOT FOR EACH LINEAR FOOT OF BUILDING FRONT PLUS 0.25 SQUARE FEET FOR EACH FOOT OF BUILDING SETBACK ABOVE THE REQUIRED SETBACK
THEREFORE, 46 LF OF BUILDING FRONTAGE PLUS 0 LF OF BUILDING SETBACK ABOVE THE REQUIRED SETBACK EQUALS 46 SF MAXIMUM SIGN AREA

GRAPHIC SCALE

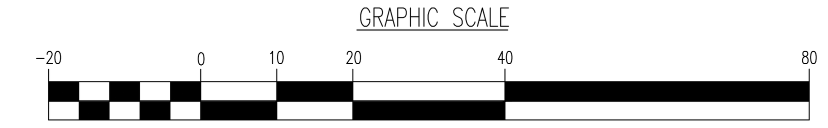

(IN FEET)
1 INCH = 20 FT.

Plotted: 08/15/22 - 12:40 PM, By: nleloia
File: P:\DECPC PROJECTS\1329 Wenesco Restaurant Systems\99-006 Yorktown NY\Dwg\Site Plans\D1329990065XS.dwg, ---> 02 SITE PLAN

DYNAMIC
• ENGINEERING • EARTH
• SURVEY • TRAFFIC

REV.	DATE	COMMENTS	BY
1	08/04/22	REVISED PER PLANNING BOARD COMMENTS	NPL

THIS PLAN SET IS FOR PERMITTING PURPOSES ONLY AND MAY NOT BE USED FOR CONSTRUCTION

DRAWN BY: NPL
DESIGNED BY: NPL
CHECKED BY: DTS
CHECKED BY: –

PROJECT:
WENESCO YORKTOWN, LLC
PROPOSED DRIVE-THRU WENDY'S RESTAURANT
TAX LOT 36.06-2-76
3399 CROMPOND ROAD (US ROUTE 202 / N.Y.S.R. 35)
TOWN OF YORKTOWN, WESTCHESTER COUNTY, NEW YORK

811
Know what's below. Call before you dig.
PROTECT YOURSELF
ALL STATES REQUIRE NOTIFICATION OF EXCAVATORS, DESIGNERS, OR ANY PERSON PREPARING TO DISTURB THE EARTH'S SURFACE ANYWHERE IN ANY STATE
FOR STATE SPECIFIC DIRECT PHONE NUMBERS VISIT: WWW.CALL811.COM

DYNAMIC ENGINEERING
LAND DEVELOPMENT CONSULTING • PERMITTING
GEOTECHNICAL • ENVIRONMENTAL
TRAFFIC • SURVEY • PLANNING & ZONING
245 Main Street, Suite 110
Chester, NJ 07930
T: 908.879.9229 | F: 908.879.0222
Offices conveniently located at:
Lake Como, New Jersey • T: 732.974.0198
Chester, New Jersey • T: 908.879.9229
Newark, New Jersey • T: 973.755.7200
Toms River, New Jersey • T: 732.678.0000
Newtown, Pennsylvania • T: 267.685.0276
Philadelphia, Pennsylvania • T: 215.253.4888
Bethlehem, Pennsylvania • T: 610.598.4400
Allen, Texas • T: 972.534.2100
Houston, Texas • T: 281.789.6400
Austin, Texas • T: 512.646.2646
Delray Beach, Florida • T: 561.921.8570
www.dynamicec.com

DANIEL T. SEHNAL
PROFESSIONAL ENGINEER
NEW YORK LICENSE No. 099106

JOSEPH G. JAWORSKI
PROFESSIONAL ENGINEER
NEW YORK LICENSE No. 075707

TITLE: SITE PLAN

SCALE: (H) 1"=20' (V)
DATE: 06/27/2022
PROJECT No: 1329-99-006

SHEET No: 2 OF 5
Rev. #: 1

COPYRIGHT © 2022 - DYNAMIC ENGINEERING CONSULTANTS, PC - ALL RIGHTS RESERVED

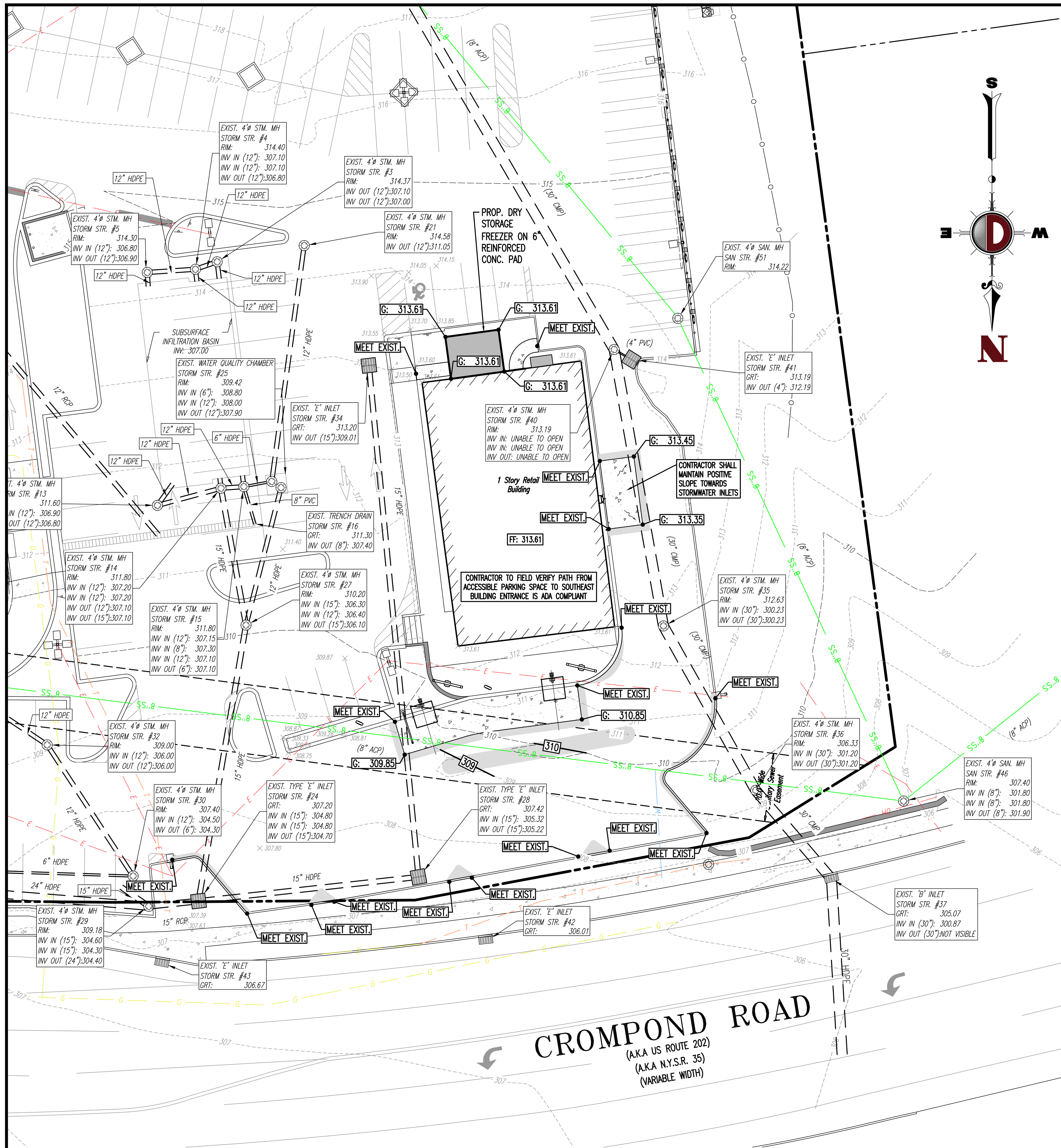

GRADING/UTILITY GRAPHIC LEGEND

PROPERTY LINE (PARCEL IN QUESTION)
OFF-SITE PROPERTY LINES

EXIST. CABLE LINE
PROP. CABLE LINE
EXIST. ELECTRIC LINE
PROP. ELECTRIC LINE
EXIST. FIBER OPTIC LINE
PROP. FIBER OPTIC LINE
EXIST. GAS LINE
PROP. GAS LINE
EXIST. OVERHEAD WIRES
PROP. OVERHEAD WIRES
EXIST. TELEPHONE LINE
PROP. TELEPHONE LINE
EXIST. UNDERGROUND ELEC./TELE. SERVICE (NO. & SIZE OF CONDUITS NOT DEFINED)
PROP. UNDERGROUND ELEC./TELE. SERVICE (NO. & SIZE OF CONDUITS NOT DEFINED)
EXIST. WATER LINE
PROP. WATER LINE
EXIST. SANITARY SEWER LINE
PROP. SANITARY SEWER LINE
EXIST. STORM DRAIN LINE
PROP. STORM DRAIN LINE
EXIST. MINOR CONTOUR & ELEVATION
EXIST. MAJOR CONTOUR & ELEVATION
PROP. FINISH GRADE CONTOUR & ELEVATION
EXIST. MONITORING WELL
APPROX. TEST PIT LOCATION

EXIST. SPOT ELEVATIONS
EXIST. GUTTER ELEV.
EXIST. TOP OF CURB ELEV.
EXIST. FINISH FLOOR ELEV.
EXIST. GARAGE FLOOR ELEV.
EXIST. FIRE HYDRANT
EXIST. WATER VALVE
EXIST. GAS VALVE
EXIST. GAS METER
EXIST. ELECTRIC METER
EXIST. ELECTRIC BOX
EXIST. CLEAN OUT
EXIST. WELL
EXIST. WATER SHUT OFF VALVE
EXIST. TELEPHONE BOX
EXIST. CABLE TV BOX
EXIST. UTILITY POLE
EXIST. GUY WIRE
EXIST. LIGHT POLE
EXIST. BUILDING LIGHT
EXIST. SHOE BOX LIGHT
EXIST. COBRA LIGHT POLE
EXIST. TRAFFIC SIGNAL POLE
EXIST. MANHOLE
EXIST. "A" INLET
EXIST. "B" INLET
EXIST. "E" INLET
EXIST. YARD INLET
EXIST. FLARED END SECTION
EXIST. HEADWALL

PROP. GRADE SPOT ELEV.
PROP. TOP OF CURB & FINISHED GRADE ELEV.
PROP. FINISHED FLOOR ELEV.
PROP. TOP OF WALL & FINISHED GRADE @ LOW SIDE OF WALL (ACTUAL BOTTOM OF WALL FOOTING TO BE ESTABLISHED BY WALL DESIGNER)
PROP. TOP OF EXTENDED CURB, (GH) FINISHED GRADE @ HIGH SIDE OF EXTENDED CURB & (GL) FINISHED GRADE @ LOW SIDE OF EXTENDED CURB
PROP. DIRECTION OF DRAINAGE FLOW ARROW
PROP. WATER VALVE
PROP. GAS VALVE
PROP. STORM CLEANOUT
PROP. SANITARY CLEANOUT
PROP. AREA LIGHT
PROP. OUTLET CONTROL STRUCTURE
PROP. DRAINAGE MANHOLE
PROP. SANITARY SEWER MANHOLE
PROP. 'A' INLET
PROP. 'B' INLET
PROP. 'E' INLET
PROP. YARD INLET
PROP. FLARED END SECTION
PROP. HEADWALL

GRADING NOTES

1. SITE GRADING SHALL BE PERFORMED IN ACCORDANCE WITH THESE PLANS AND SPECIFICATIONS AND THE RECOMMENDATIONS SET FORTH IN THE SOILS REPORT REFERENCED IN THIS PLAN SET. THE CONTRACTOR SHALL BE RESPONSIBLE FOR REMOVING AND REPLACING ALL SOFT, YIELDING OR UNSUITABLE MATERIALS AND REPLACING WITH SUITABLE MATERIALS AS SPECIFIED IN THE SOILS REPORT. ALL EXCAVATED OR FILLED AREAS SHALL BE COMPACTED TO 95% OF MODIFIED PROCTOR MAXIMUM DENSITY PER A.S.T.M. TEST D-1557. MOISTURE CONTENT AT TIME OF PLACEMENT SHALL NOT EXCEED 2% ABOVE NOR 3% BELOW OPTIMUM. CONTRACTOR SHALL SUBMIT A COMPACTION REPORT PREPARED BY A QUALIFIED SOILS ENGINEER, REGISTERED WITHIN THE STATE WHERE THE WORK IS PERFORMED, VERIFYING THAT ALL FILLED AREAS AND SUBGRADE AREAS WITHIN THE BUILDING PAD AREA AND AREAS TO BE PAVED HAVE BEEN COMPACTED IN ACCORDANCE WITH THESE PLANS AND SPECS AND THE RECOMMENDATIONS SET FORTH IN THE SOILS REPORT.
2. CONTRACTOR IS RESPONSIBLE FOR VERIFICATION OF EXISTING TOPOGRAPHIC INFORMATION AND UTILITY INVERT ELEVATIONS PRIOR TO COMMENCEMENT OF ANY CONSTRUCTION. CONTRACTOR TO ENSURE 0.75% MIN. SLOPE AGAINST ALL ISLAND GUTTERS, CURBS AND 1.0% ON ALL CONCRETE SURFACES, AND 1-1/2% MIN. ON ASPHALT, TO PREVENT PONDING. ANY DISCREPANCIES THAT MAY EFFECT THE PUBLIC SAFETY OR PROJECT COST, MUST BE IDENTIFIED TO THE ENGINEER IN WRITING IMMEDIATELY. PROCEEDING WITH CONSTRUCTION WITH DESIGN DISCREPANCIES IS DONE SO AT THE CONTRACTOR'S OWN RISK.
3. PROPOSED TOP OF CURB ELEVATIONS ARE GENERALLY 6" ABOVE EXISTING LOCAL ASPHALT GRADE UNLESS OTHERWISE NOTED. FIELD ADJUST TO CREATE A MIN. OF 0.75% GUTTER GRADE ALONG CURB FACE. ENGINEER TO APPROVE FINAL CURBING CUT SHEETS PRIOR TO INSTALLATION.
4. SUBBASE MATERIAL FOR SIDEWALKS, CURB, OR ASPHALT SHALL BE FREE OF ORGANICS AND OTHER UNSUITABLE MATERIALS. SHOULD SUBBASE BE DEEMED UNSUITABLE, SUBBASE IS TO BE REMOVED AND FILLED WITH APPROVED FILL MATERIAL COMPACTED TO 95% OPTIMUM DENSITY (AS DETERMINED BY MODIFIED PROCTOR METHOD).
5. REFER TO SITE PLAN FOR ADDITIONAL NOTES.
6. IN CASE OF DISCREPANCIES BETWEEN PLANS, THE SITE PLAN WILL SUPERCEDE IN ALL CASES. CONTRACTOR MUST NOTIFY ENGINEER OF RECORD OF ANY CONFLICT IMMEDIATELY.
7. MAXIMUM CROSS SLOPE OF 2% ON ALL SIDEWALKS.
8. CONTRACTOR TO ENSURE A MAXIMUM OF 2% SLOPE IN ALL DIRECTIONS IN ADA PARKING SPACES AND ADA ACCESS AISLES. CONTRACTOR TO ENSURE A MAXIMUM OF 5% RUNNING SLOPE AND 2% CROSS SLOPE ALONG ALL OTHER PORTIONS OF ACCESSIBLE ROUTE, WITH THE EXCEPTION OF RAMPS AND CURB RAMPS. CONTRACTOR SHALL CLARIFY ANY QUESTIONS CONCERNING CONSTRUCTION IN ADA AREAS WITH THE ENGINEER PRIOR TO THE START OF CONSTRUCTION.
9. THE OWNER SHALL RETAIN DYNAMIC EARTH, LLC (908-879-7095) OR ALTERNATE QUALIFIED GEOTECHNICAL ENGINEER TO TEST SOIL PERMEABILITY AND PROVIDE CONSTRUCTION PHASE INSPECTIONS OF THE BASIN BOTTOM SOILS AND ANY FILL MATERIALS WITHIN ANY PROPOSED INFILTRATION OR RETENTION BASIN TO COMPARE RESULTS TO DESIGN CRITERIA.
10. CONTRACTOR IS TO REMOVE EXISTING UNSUITABLE OR OVERLY COMPACT SOIL OR ROCK AS NEEDED TO ACHIEVE REQUIRED PERMEABILITY AS DIRECTED BY THE OWNERS GEOTECHNICAL ENGINEER, AND NEW FILL, IF NEEDED, SHALL HAVE AN IN PLACE PERMEABILITY GREATER THAN OR EQUAL TO THE DESIGN CRITERIA.
11. CONTRACTOR IS RESPONSIBLE FOR CONTACTING THE OWNER'S GEOTECHNICAL ENGINEER PRIOR TO ONSET OF CONSTRUCTION TO SUBMIT AND CONFIRM THE CONTRACTOR'S PROPOSED MEANS AND MATERIALS AND TO SCHEDULE INSPECTIONS FOR BOTTOM OF BASIN, REMOVAL OF UNSUITABLE SOIL, FILL PLACEMENT, AND FINAL BASIN PERMEABILITY TESTING.
12. THE CONTRACTOR IS RESPONSIBLE FOR AS-BUILT PLANS AND GRADE CONTROL UNLESS DEFINED OTHERWISE ELSEWHERE IN THE CONTRACT DOCUMENTS.

ADA NOTES

ALL SLOPES INDICATED ARE ACTUAL. CONTRACTOR TO REFER TO LATEST ADA GUIDELINES FOR SLOPE LIMITS. AT THE TIME OF PLAN DESIGN, THE SLOPE LIMITS ARE AS FOLLOWS:

SIDEWALKS/ ACCESSIBLE ROUTES
- RUNNING SLOPE: 1:20 (5%) MAX. (4.5% MAX. FOR NEW CONSTRUCTION)
- CROSS SLOPE: 1:48 (2.08%) MAX., 1.0% MIN. (1.5% MAX. FOR NEW CONSTRUCTION)
- INTERSECTION SLOPE: 1:48 (2.08%) MAX. IN ALL DIRECTIONS (1.5% MAX. FOR NEW CONSTRUCTION)
- CHANGE IN LEVELS: ¼" MAX. HEIGHT OR ½" MAX. HEIGHT WITH BEVELED EDGE BEVELED EDGE SLOPE OF 1:2 (50%) MAX.
- GAPS: ½" MAX. WIDTH ELONGATED OPENINGS SHALL BE PLACED SO LONG DIMENSION IS PERPENDICULAR TO PATH OF TRAVEL

CURB RAMP
- SLOPE 1:12 (8.3%) MAX. (7.4% MAX. FOR NEW CONSTRUCTION)
- SIDE FLARE SLOPE: 1:10 (10%) MAX. (WHERE PEDS CROSS RAMP)
- BOTTOM LANDING: 48" MIN. LENGTH; WIDTH TO MATCH CURB RAMP; 1:48 MAX. (2.08%) IN ALL DIRECTIONS (1.5% MAX. FOR NEW CONSTRUCTION)
- TOP LANDING: 36" MIN. LENGTH; WIDTH TO MATCH CURB RAMP; 1:48 MAX. (2.08%) CROSS SLOPE (1.5% MAX. FOR NEW CONSTRUCTION) AND 1:20 (5%) RUNNING SLOPE (4.5% MAX FOR NEW CONSTRUCTION)

ACCESSIBILITY PARKING STALLS
- SPACE AND ACCESS AISLE SLOPE: 1:48 MAX. (2.08%) IN ALL DIRECTIONS (1.5% MAX. FOR NEW CONSTRUCTION)

CROSSWALKS
- RUNNING SLOPE: 1:20 (5%) MAX. (4.5% MAX. FOR NEW CONSTRUCTION)
- CROSS SLOPE: 1:48 (2.08%) MAX. (1.5% MAX. FOR NEW CONSTRUCTION)
- CHANGE IN LEVELS: ¼" MAX. HEIGHT OR ½" MAX. HEIGHT WITH BEVELED EDGE. BEVELED EDGE SLOPE OF 1:2 (50%) MAX.
- GAPS: 1/2" MAX. WIDTH ELONGATED OPENINGS SHALL BE PLACED SO LONG DIMENSION IS PERPENDICULAR TO PATH OF TRAVEL

RAMPS
- SLOPE: 1:12 (8.3%) MAX. (7.4% MAX. FOR NEW CONSTRUCTION)
- EXISTING RAMPS; SLOPE: 1:10 (10%) MAX. FOR RISE OF 6"; 1:8 (12.5%) MAX. FOR MAX. RISE OF 3"
- MAX. RISE: 30"
- MIN. CLEAR WIDTH: 36"
- MIN. LANDING CLEAR LENGTH: 60"
- MAX. CROSS SLOPE: 1:48 (2.08%) (1.5% MAX. FOR NEW CONSTRUCTION)

GRAPHIC SCALE
-20 0 10 20 40 80
(IN FEET)
1 INCH = 20 FT.

DYNAMIC • ENGINEERING • EARTH • SURVEY • TRAFFIC

REV.	DATE	COMMENTS	BY
1	08/04/22	REVISED PER PLANNING BOARD COMMENTS	NPL

THIS PLAN SET IS FOR PERMITTING PURPOSES ONLY AND MAY NOT BE USED FOR CONSTRUCTION

DRAWN BY: NPL
DESIGNED BY: NPL
CHECKED BY: DTS
CHECKED BY: -

PROJECT: **WENESCO YORKTOWN, LLC**
PROPOSED DRIVE-THRU WENDY'S RESTAURANT
TAX LOT 36.06-2-76
3399 CROMPOND ROAD (US ROUTE 202 / N.Y.S.R. 35)
TOWN OF YORKTOWN, WESTCHESTER COUNTY, NEW YORK

811 Know what's below. Call before you dig.
PROTECT YOURSELF
ALL STATES REQUIRE NOTIFICATION OF EXCAVATORS, DESIGNERS, OR ANY PERSON PREPARING TO DISTURB THE EARTH'S SURFACE ANYWHERE IN ANY STATE
FOR STATE SPECIFIC DIRECT PHONE NUMBERS VISIT: WWW.CALL811.COM

DYNAMIC ENGINEERING
LAND DEVELOPMENT CONSULTING • PERMITTING
GEOTECHNICAL • ENVIRONMENTAL
TRAFFIC • SURVEY • PLANNING & ZONING
245 Main Street, Suite 110
Chester, NJ 07930
T: 908.879.9229 | F: 908.879.0222
Offices conveniently located at:
Lake Como, New Jersey • T: 732.974.0198
Chester, New Jersey • T: 908.879.9229
Newark, New Jersey • T: 973.755.7200
Toms River, New Jersey • T: 732.678.0000
Newtown, Pennsylvania • T: 267.685.0276
Philadelphia, Pennsylvania • T: 215.253.4888
Bethlehem, Pennsylvania • T: 610.598.4400
Allen, Texas • T: 972.534.2100
Houston, Texas • T: 281.789.6400
Austin, Texas • T: 512.646.2646
Delray Beach, Florida • T: 561.921.8570
www.dynamicec.com

DANIEL T. SEHNAL
PROFESSIONAL ENGINEER
NEW YORK LICENSE No. 099106

JOSEPH G. JAWORSKI
PROFESSIONAL ENGINEER
NEW YORK LICENSE No. 075707

TITLE: GRADING, DRAINAGE, AND UTILITY PLAN

SCALE: (H) 1"=20' (V)
DATE: 06/27/2022
PROJECT No: 1329-99-006
SHEET No: 3 OF 5
Rev. #: 1

Plotted: 08/15/22 – 12:46 PM, By: nleloia
File: P:\DECPC PROJECTS\1329 Wenesco Restaurant Systems\99-006 Yorktown NY\Dwg\Site Plans\D1329990065XG.dwg, ---> 03 GRADING DRAINAGE AND UTILITY PLAN

COPYRIGHT © 2022 - DYNAMIC ENGINEERING CONSULTANTS, PC - ALL RIGHTS RESERVED

THIS PLAN TO BE UTILIZED FOR LANDSCAPE PURPOSES ONLY

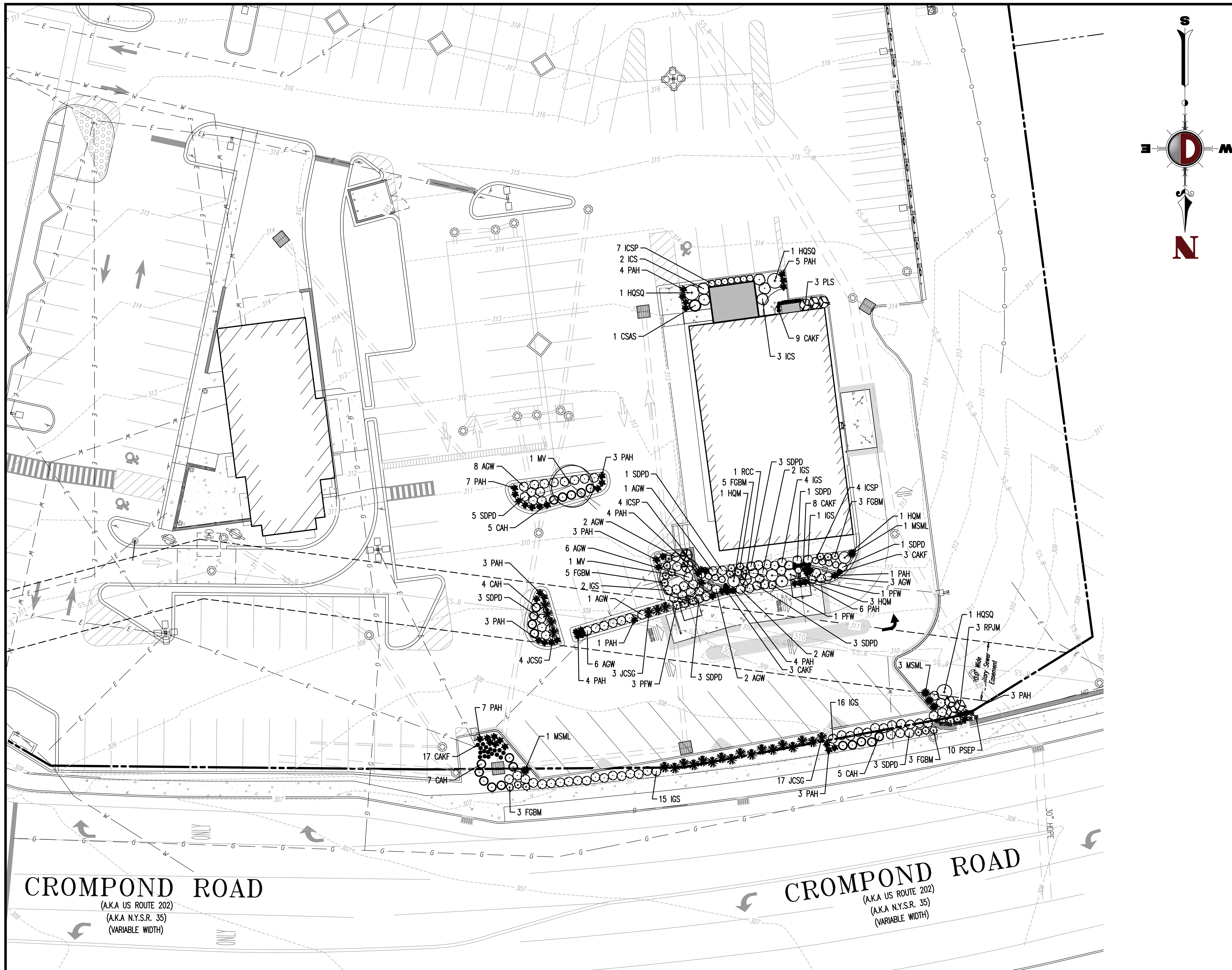

PLANTING SPECIFICATIONS

1. SCOPE OF WORK
   A. THIS WORK SHALL CONSIST OF PERFORMING, CLEARING AND SOIL PREPARATION, FINISH GRADING, PLANTING AND DRAINAGE, INCLUDING ALL LABOR, MATERIALS, TOOLS, EQUIPMENT, AND ANY OTHER APPURTENANCES NECESSARY FOR THE COMPLETION OF THIS PROJECT.
2. MATERIALS
   A. GENERAL – ALL MATERIALS SHALL MEET OR EXCEED SPECIFICATIONS AS OUTLINED IN THE STATE DEPARTMENT OF TRANSPORTATION (D.O.T.) MANUAL OF ROADWAY AND BRIDGE CONSTRUCTION (LATEST EDITION) OR APPROVED EQUAL.
   B. PLANTS – ALL PLANTS SHALL BE HEALTHY OR NORMAL GROWTH, WELL ROOTED, FREE FROM DISEASE AND INSECTS.
   C. TOPSOIL – LOAMY SILT, HAVING AN ORGANIC CONTENT NOT LESS THAN 5%, pH RANGE BETWEEN 4.5 – 7, BE FREE OF DEBRIS, ROCKS LARGER THAN TWO INCHES (2"), WOOD, ROOTS, VEGETABLE MATTER AND CLAY CLODS.
   D. MULCH – FOUR (4") INCHES DOUBLE SHREDDED HARDWOOD BARK MULCH.
3. FERTILIZER AND SOIL CONDITIONER – PLANTED AREAS
   A. ORGANIC FERTILIZER – SHALL BE PROCESSED SEWER SLUDGE WITH MINIMAL CONTENT OF 1% NITROGEN AND 2% PHOSPHORIC ACID, EQUAL TO 'NITROHUMIS'.
   B. ORGANIC FERTILIZER AND SOIL CONDITIONER – SHALL BE 'GRO- POWER' AND ORGANIC BASE MATERIALS COMPRISED OF DECOMPOSED ANIMAL AND VEGETABLE MATTER AND COMPOSTED TO SUPPORT BACTERIAL CULTURES, CONTAINING NO POULTRY OR HUMAN WASTE. GUARANTEED ANALYSIS (5–3–1): NITROGEN 5%. PHOSPHATE 3%, POTASH 1%. 50% HUMUS AND 15% HUMIC ACIDS.
4. GENERAL WORK PROCEDURES
   A. LANDSCAPE WORK SHALL COMMENCE AS SOON AS THOSE PORTIONS OF THE SITE ARE AVAILABLE. CONTRACTOR TO UTILIZE WORKMANLIKE STANDARDS IN PERFORMING ALL LANDSCAPE CONSTRUCTION. THE SITE IS TO BE LEFT IN A CLEAN STATE AT THE END OF EACH DAY'S WORK. ALL DEBRIS, MATERIALS, AND TOOLS SHALL BE PROPERLY STOCKPILED OR DISPOSED OF. ALL PAVED SURFACES SHALL BE SWEPT CLEAN AT THE END OF EACH DAYS WORK.
5. WEEDING
   A. BEFORE AND DURING PRELIMINARY GRADING AND FINISH GRADING, ALL WEEDS AND GRASSES SHALL BE DUG OUT BY THE ROOTS AND DISPOSED OF AT THE CONTRACTOR'S EXPENSE.
6. TOPSOILING
   A. CONTRACTOR TO PROVIDE A 4" THICK TOPSOIL LAYER IN ALL PLANTING AREAS. TOPSOIL SHOULD BE SPREAD OVER A PREPARED SURFACE IN A UNIFORM LAYER TO PRODUCE A 4" UNSETTLED THICKNESS. TOPSOIL PRESENT AT THE SITE, IF ANY, MAY BE USED TO SUPPLEMENT TOTAL AMOUNT REQUIRED. CONTRACTOR TO FURNISH AN ANALYSIS OF ON-SITE TOPSOIL UTILIZED IN ALL PLANTING AREAS. ADJUST pH AND NUTRIENT LEVELS AS REQUIRED TO ENSURE AN ACCEPTABLE GROWING MEDIUM.
7. SOIL CONDITIONING:
   A. CULTIVATE ALL AREAS TO BE PLANTED TO A DEPTH OF 6". ALL DEBRIS EXPOSED FROM EXCAVATION AND CULTIVATION SHALL BE DISPOSED OF AT THE CONTRACTOR'S EXPENSE. SPREAD EVENLY IN ALL PLANTING AREAS AND TILL (2 DIRECTIONS) INTO TOP 4" WITH THE FOLLOWING PER 1,000 SQ. FT.:
      20 POUNDS 'GRO-POWER'
      100 POUNDS AGRICULTURAL GYPSUM
      20 POUNDS NITROFORM (COURSE) 38-0-0 BLUE CHIP

   SOIL MODIFICATIONS:
   A. THOROUGHLY TILL ORGANIC MATTER INTO THE TOP 6 TO 12 IN. OF MOST PLANTING SOILS TO IMPROVE THE SOIL'S ABILITY TO RETAIN WATER AND NUTRIENTS. USE COMPOSTED BARK, RECYCLED YARD WASTE OR PEAT MOSS. ALL PRODUCTS SHOULD BE COMPOSTED TO A DARK COLOR AND BE FREE OF PIECES WITH IDENTIFIABLE LEAF OR WOOD STRUCTURE. AVOID MATERIAL WITH A pH HIGHER THAN 7.5.
   B. MODIFY HEAVY CLAY OR SILT (MORE THAN 40% CLAY OR SILT) BY ADDING COMPOSTED PINE BARK (UP TO 30% BY VOLUME) AND/OR GYPSUM. COARSE SAND MAY BE USED IF ENOUGH IS ADDED TO BRING THE SAND CONTENT TO MORE THAN 60% OF THE TOTAL MIX. IMPROVE DRAINAGE IN HEAVY SOILS BY PLANTING ON RAISED MOUNDS OR BEDS AND INCLUDING SUBSURFACE DRAINAGE LINES.
   C. MODIFY EXTREMELY SANDY SOILS (MORE THAN 85% SAND) BY ADDING ORGANIC MATTER AND/OR DRY, SHREDDED CLAY LOAM UP TO 30% OF THE TOTAL MIX.
8. PLANTING
   POSITION TREES AND SHRUBS AT THEIR INTENDED LOCATIONS AS PER THE PLANS AND SECURE THE APPROVAL OF THE LANDSCAPE ARCHITECT BEFORE EXCAVATING PITS, MAKING NECESSARY ADJUSTMENTS AS DIRECTED.
   A. PLANTING PITS SHALL BE DUG WITH LEVEL BOTTOMS, WITH THE WIDTH TWICE THE DIAMETER OF ROOT BALL. THE ROOT BALL SHALL REST ON UNDISTURBED GRADE. EACH PLANT PIT SHALL BE BACK FILLED WITH THE FOLLOWING PREPARED SOIL MIXED THOROUGHLY:
      1 PART PEAT MOSS BY VOLUME
      1 PART COW MANURE BY VOLUME
      3 PARTS TOPSOIL BY VOLUME
      21 GRAM 'AGRIFORM' PLANTING TABLETS AS FOLLOWS:
         2 TABLETS PER 1 GAL. PLANT
         3 TABLETS PER 5 GAL. PLANT
         4 TABLETS PER 15 GAL. PLANT
         LARGER PLANTS (2) TWO TABLETS PER 1/2" DIAM. OF TRUNK CALIPER
   B. PREPARED SOIL SHALL BE TAMPED FIRMLY AT BOTTOM OF PIT. FILL PREPARED SOIL AROUND BALL OF PLANT 1/2 WAY, AND INSERT PLANT TABLETS. COMPLETE BACK FILL AND WATER THOROUGHLY.
   C. ALL PLANTS SHALL BE SET SO THAT, THEY BEAR THE SAME RELATION TO THE REQUIRED GRADE AS THEY BORE TO THE NATURAL GRADE BEFORE BEING TRANSPLANTED.
   D. PREPARE RAISED EARTH BASIN AS WIDE AS PLANTING HOLE OF EACH TREE.
   E. WATER IMMEDIATELY AFTER PLANTING. WATER SHALL BE APPLIED TO EACH TREE AND SHRUB IN SUCH MANNER AS NOT TO DISTURB BACK FILL AND TO THE EXTENT THAT ALL MATERIALS IN THE PLANTING HOLE ARE THOROUGHLY SATURATED.
   F. PRUNE ALL PROPOSED TREES DIRECTLY ADJACENT TO WALKWAYS TO A MIN. OF 7' BRANCHING HEIGHT.
9. GROUND COVER
   A. ALL GROUND COVER AREAS SHALL RECEIVE A 1/4" LAYER OF HUMUS RAKED INTO THE TOP 1" OF PREPARED SOIL PRIOR TO PLANTING GROUND COVER.
   B. SPACING AND VARIETY OF GROUND COVER SHALL BE AS SHOWN ON DRAWINGS.
   C. IMMEDIATELY AFTER PLANTING GROUND COVER, CONTRACTOR SHALL THOROUGHLY WATER GROUND COVER.
   D. ALL GROUND COVER AREAS SHALL BE TREATED WITH A PRE-EMERGENT BEFORE FINAL LANDSCAPE INSPECTION. GROUND COVER AREAS SHALL BE WEEDED PRIOR TO APPLYING PRE-EMERGENT. PRE-EMERGENT TO BE APPLIED AS PER MANUFACTURER'S RECOMMENDATION.
10. FINISH GRADING
   A. ALL AREAS WILL BE RECEIVED BY THE CONTRACTOR AT SUBSTANTIALLY PLUS/MINUS .1 FOOT OF FINISH GRADE.
   B. ALL LAWN AND PLANTING AREAS SHALL BE GRADED TO A SMOOTH, EVEN AND UNIFORM PLANE WITH NO ABRUPT CHANGE OF SURFACE, UNLESS OTHERWISE DIRECTED BY LANDSCAPE ARCHITECT. SOIL AREAS ADJACENT TO THE BUILDINGS SHALL SLOPE AWAY.
   C. ALL PLANTING AREAS SHALL BE GRADED AND MAINTAINED TO ALLOW FREE FLOW OF SURFACE WATER.
11. GUARANTEE
   A. CONTRACTOR SHALL GUARANTEE ALL PLANTS FOR A PERIOD OF ONE (1) YEAR FROM ACCEPTANCE OF JOB. OWNER TO SECURE A MAINTENANCE BOND FROM THE CONTRACTOR FOR TEN PERCENT (10%) OF THE VALUE OF THE LANDSCAPE INSTALLATION WHICH WILL BE RELEASED AT THE COMMENCEMENT OF THE GUARANTEE PERIOD AND PASSES A FINAL INSPECTION BY THE OWNER OR OWNERS REPRESENTATIVE.
12. CLEANUP
   A. UPON THE COMPLETION OF ALL PLANTING WORK AND BEFORE FINAL ACCEPTANCE, THE CONTRACTOR SHALL REMOVE ALL MATERIAL, EQUIPMENT, AND DEBRIS RESULTING FROM HIS WORK. ALL PAVED AREAS SHALL BE BROOM CLEANED AND THE SITE LEFT IN A NEAT AND ACCEPTABLE CONDITION AS APPROVED BY THE OWNER'S AUTHORIZED REPRESENTATIVE.
   B. MAINTAIN TREES, SHRUBS AND OTHER PLANTS BY PRUNING, CULTIVATING AND WEEDING AS REQUIRED FOR HEALTHY GROWTH. RESTORE PLANTING SAUCERS. TIGHTEN AND REPAIR STAKE AND GUY SUPPORTS AND RESET TREES AND SHRUBS TO PROPER GRADES OR VERTICAL POSITION AS REQUIRED. RESTORE OR REPLACE DAMAGED WRAPPINGS. SPRAY WITH HERBICIDE AS REQUIRED TO KEEP TREES AND SHRUBS FREE OF INSECTS AND DISEASE.
   C. MAINTAIN LAWNS BY WATERING, FERTILIZING, WEEDING, MOWING, TRIMMING, AND OTHER OPERATIONS SUCH AS ROLLING, REGRADING AND REPLANTING AS REQUIRED TO ESTABLISH A SMOOTH, ACCEPTABLE LAWN, FREE OF ERODED OR BARE AREAS.
13. MAINTENANCE (ALTERNATE BID) COST PER MONTH AFTER INITIAL 90-DAY MAINTENANCE PERIOD.

PLANTING NOTES

1. PLANT MATERIAL SHALL BE FURNISHED AND INSTALLED AS INDICATED; INCLUDING ALL LABOR, MATERIALS, PLANTS, EQUIPMENT, INCIDENTALS, AND CLEAN-UP.
2. THE CONTRACTOR SHALL BE RESPONSIBLE FOR PLANTING AT CORRECT GRADES AND ALIGNMENT. LAYOUT TO BE APPROVED BY LANDSCAPE ARCHITECT PRIOR TO INSTALLATION.
3. PLANTS SHALL BE TYPICAL OF THEIR SPECIES AND VARIETY; HAVE NORMAL GROWTH HABITS; WELL DEVELOPED BRANCHES, DENSELY FOLIATED, VIGOROUS ROOT SYSTEMS AND BE FREE FROM DEFECTS AND INJURIES.
4. CONTRACTOR SHALL REPORT ANY SOIL OR DRAINAGE CONDITIONS CONSIDERED DETRIMENTAL TO THE GROWTH OF PLANT MATERIAL.
5. ALL PLANT MATERIAL SHALL BE GUARANTEED BY THE CONTRACTOR TO BE IN VIGOROUS GROWING CONDITION. PROVISION SHALL BE MADE FOR A GROWTH GUARANTEE OF AT LEAST ONE (1) YEAR FROM THE DATE OF ACCEPTANCE FOR TREES AND SHRUBS. REPLACEMENTS SHALL BE MADE AT THE BEGINNING OF THE FIRST SUCCEEDING PLANTING SEASON. ALL REPLACEMENTS SHALL HAVE A GUARANTEE EQUAL TO THAT STATED ABOVE.
6. INSOFAR AS IT IS PRACTICABLE, PLANT MATERIAL SHALL BE PLANTED ON THE DAY OF DELIVERY. IN THE EVENT THIS IS NOT POSSIBLE, THE CONTRACTOR SHALL PROTECT STOCK NOT PLANTED. PLANTS SHALL NOT REMAIN UNPLANTED FOR LONGER THAN A THREE DAY PERIOD AFTER DELIVERY. ANY PLANTS NOT INSTALLED DURING THIS PERIOD WILL BE REJECTED.
7. QUALITY AND SIZE OF PLANTS, SPREAD OF ROOTS, AND SIZE OF BALLS SHALL BE IN ACCORDANCE WITH ANSI Z60.1 (REV. 2001) "AMERICAN STANDARD FOR NURSERY STOCK" AS PUBLISHED BY THE AMERICAN NURSERY & LANDSCAPE ASSOCIATION.
8. ALL PLANTS SHALL BE PLANTED IN AMENDED TOPSOIL THAT IS THOROUGHLY WATERED AND TAMPED AS BACK FILLING PROGRESSES. PLANTING MIX TO BE AS SHOWN ON PLANTING DETAILS. LARGE PLANTING AREAS TO INCORPORATE FERTILIZER AND SOIL CONDITIONERS AS STATED IN PLANTING SPECIFICATIONS.
9. PLANTS SHALL NOT BE BOUND WITH WIRE OR ROPE AT ANY TIME SO AS TO DAMAGE THE BARK OR BREAK BRANCHES. PLANTS SHALL BE HANDLED FROM THE BOTTOM OF THE BALL ONLY.
10. PLANTING OPERATIONS SHALL BE PERFORMED DURING PERIODS WITHIN THE PLANTING SEASON WHEN WEATHER AND SOIL CONDITIONS ARE SUITABLE AND IN ACCORDANCE WITH ACCEPTED LOCAL PRACTICE. PLANTS SHALL NOT BE INSTALLED IN TOPSOIL THAT IS IN A MUDDY OR FROZEN CONDITION. ALL PLANT MATERIAL SHALL BE SPRAYED WITH 'WILT-PRUF' OR EQUAL AS PER MANUFACTURER'S INSTRUCTIONS.
11. NO PLANT, EXCEPT GROUND COVERS, SHALL BE PLANTED LESS THAN TWO FEET FROM EXISTING STRUCTURES AND SIDEWALKS.
12. SET ALL PLANTS PLUMB AND STRAIGHT. SET AT SUCH LEVEL THAT, A NORMAL OR NATURAL RELATIONSHIP TO THE CROWN OF THE PLANT WITH THE GROUND SURFACE WILL BE ESTABLISHED. LOCATE PLANT IN THE CENTER OF THE PIT.
13. ALL INJURED ROOTS SHALL BE PRUNED TO MAKE CLEAN ENDS BEFORE PLANTING UTILIZING CLEAN, SHARP TOOLS. IT IS ADVISABLE TO PRUNE APPROXIMATELY 1/3 OF THE GROWTH OF LARGE TREES (2" CALIPER AND OVER) BY THE REMOVAL OF SUPERFLUOUS BRANCHES, THOSE WHICH CROSS, THOSE WHICH RUN PARALLEL, ETC. MAIN LEADER OF TREES WILL NOT BE CUT BACK. LONG SIDE BRANCHES, HOWEVER, MUST BE SHORTENED.
14. EACH TREE AND SHRUB SHALL BE PRUNED IN ACCORDANCE WITH STANDARD HORTICULTURAL PRACTICE TO PRESERVE NATURAL CHARACTER OF PLANT. PRUNING SHALL BE DONE WITH CLEAN, SHARP TOOLS.
15. ALL EXISTING TREES TO REMAIN SHALL BE PRUNED TO REMOVE ANY DAMAGED BRANCHES AS A RESULT OF CONSTRUCTION OPERATIONS. ALL EXISTING TREES SHALL BE FERTILIZED WITH A REGULAR GARDEN FERTILIZER (5-10-5) UPON COMPLETION OF WORK. THE ENTIRE LIMB OF ANY DAMAGED BRANCH SHALL BE CUT OFF AT THE TRUNK. CONTRACTOR TO ENSURE THAT CUTS ARE SMOOTH AND STRAIGHT. ANY EXPOSED ROOTS SHALL BE CUT BACK WITH SHARP TOOLS AND FILLED AROUND WITH TOPSOIL. COMPLETELY SATURATE THESE AREAS WITH WATER. ROOTS SHALL NOT BE LEFT EXPOSED FOR MORE THAN ONE (1) DAY. CONTRACTOR IS TO PROTECT ALL EXISTING TREES TO REMAIN BY ERECTING TREE PROTECTION FENCE AT THE DRIP LINE. THIS WILL ENSURE NO COMPACTION OF THE ROOT MASS.
16. ALL PLANTING BEDS SHALL BE MULCHED WITH 4" LAYER OF DOUBLE SHREDDED HARDWOOD BARK MULCH.
17. NEW PLANTING AREAS AND SOD SHALL BE ADEQUATELY IRRIGATED OR WATERED TO ESTABLISH THE PROPOSED PLANTS AND LAWN.
18. PRIOR TO THE ISSUANCE OF ANY CERTIFICATE OF OCCUPANCY, THE PROPOSED LANDSCAPE AS SHOWN ON THE APPROVED LANDSCAPE PLAN MUST BE INSTALLED, INSPECTED AND APPROVED BY THE MUNICIPAL LANDSCAPE ARCHITECT. THE MUNICIPAL ENGINEER AND LANDSCAPE ARCHITECT SHALL TAKE INTO ACCOUNT SEASONAL CONSIDERATIONS IN THIS REGARD AS FOLLOWS. THE PLANTING OF TREES, SHRUBS, VINES OR GROUND COVER AS REQUIRED BY OR ASSOCIATED WITH A SUBDIVISION OR SITE PLAN APPROVAL BY THE PLANNING BOARD OR ZONING BOARD OF ADJUSTMENT SHALL BE INSTALLED DURING THE FOLLOWING PLANTING SEASONS:

TYPE	DATES
PLANTS	3/15 TO 12/15
LAWN	3/15 TO 6/15
	9/15 TO 12/1

   FURTHERMORE, THE FOLLOWING TREE VARIETIES SHALL NOT BE PLANTED DURING THE FALL PLANTING SEASON DUE TO THE HAZARDS ASSOCIATED WITH DIGGING THESE TREES IN THIS SEASON.

ACER RUBRUM	POPULUS VARIETIES
BETULA VARIETIES	PRUNUS VARIETIES
CARPINUS VARIETIES	PYRUS VARIETIES
CRATAEGUS VARIETIES	QUERCUS VARIETIES
KOELREUTERIA	SALIX WEEPING VARIETIES
LIQUIDAMBAR STYRACIFLUA	TILIA TOMENTOSA
LIRIODENDRON TULIPIFERA	ZELKOVA VARIETIES
PLATANUS ACERFOLIA	

   ANY PLANTINGS INSTALLED IN CONFLICT WITH THIS REQUIREMENT MUST RECEIVE THE WRITTEN APPROVAL BY THE MUNICIPAL ENGINEER OR LANDSCAPE ARCHITECT, PRIOR TO PLANTING. FAILURE TO COMPLY WITH THESE REQUIREMENTS WILL REQUIRE THE REMOVAL OF THE PLANTING IN QUESTION. THIS REQUIREMENT DOES NOT APPLY TO SEEDING OR SODDING OR PLANTINGS SPECIFICALLY FOR SOIL STABILIZATION PURPOSES. THE PLANTING ASSOCIATED WITH ANY LOT GIVEN A CERTIFICATE OF OCCUPANCY OUTSIDE THESE PERIODS SHALL BE PROVIDED DURING THE PREVIOUS OR NEXT APPROPRIATE SEASON.
19. ALL DISTURBED AREAS TO BE TREATED WITH TOPSOIL SEED SOD STABILIZATION METHOD.

LANDSCAPE SCHEDULE

KEY	QTY	BOTANICAL NAME	COMMON NAME	SIZE	REMARKS
ORNAMENTAL TREE(S)					
MV	2	MAGNOLIA VIRGINIANA	SWEETBAY MAGNOLIA	8-10'	B+B
EVERGREEN SHRUB(S)					
AGW	28	AZALEA X 'GIRARD'S PLEASANT WHITE'	GIRARD'S PLEASANT WHITE AZALEA	24-30"	#3 CAN
ICS	5	ILEX CRENATA 'STEEDS'	STEEDS JAPANESE HOLLY	30-36"	#5 CAN
ICSP	16	ILEX CRENATA 'SKY PENCIL'	SKY PENCIL HOLLY	3-4'	#5 CAN
IGS	45	ILEX GLABRA 'SHAMROCK'	SHAMROCK INKBERRY HOLLY	24-30"	#3 CAN
JCSG	25	JUNIPERUS CHINENSIS 'SEA GREEN'	SEA GREEN JUNIPER	30-36"	#5 CAN
PLS	3	PRUNUS LAUROCERASUS 'SCHIPKAENSIS'	SKIP CHERRYLAUREL	30-36"	#5 CAN
RCC	4	RHODODENDRON CATAWBIENSE 'CHIONOIDES'	CHINOIDES RHODODENDRON	24-30"	#3 CAN
RPJM	3	RHODODENDRON CAROLINIANA X PJM	PJM RHODODENDRON	24-30"	#3 CAN
	129				
DECIDUOUS SHRUB(S)					
CAH	21	CLETHRA ALNIFOLIA 'HUMMINGBIRD'	HUMMINGBIRD SUMMERSWEET	24-30"	#3 CAN
CSAS	1	CEANOTHUS AMERICANUS	NEW JERSEY TEA	24-30"	#3 CAN
FGBM	22	FOTHERGILLA GARDENII 'BLUE MIST'	'BLUE MIST' DWARF FOTHERGILLA	24-30"	#3 CAN
HQM	5	HYDRANGEA QUERCIFOLIA 'MUNCHKIN'	MUNCHKIN OAKLEAF HYDRANGEA	24-30"	#3 CAN
HQSQ	3	HYDRANGEA QUERCIFOLIA 'SNOW QUEEN'	SNOW QUEEN OAKLEAF HYDRANGEA	30-36"	#5 CAN
PFW	5	POTENTILLA FRUTICOSA 'HAPPY FACE WHITE'	HAPPY FACE WHITE POTENTILLA	24-30"	#3 CAN
SDPD	24	SPIREA X 'NCSX2'	DOUBLE PLAY DOOZIE SPIREA	24-30"	#3 CAN
	81				
PERENNIAL(S)					
PSEP	10	PHLOX SUBULATA 'EMERALD PINK'	EMERALD PINK PHLOX	1 GAL.	CONTAINER
ORNAMENTAL GRASS(ES)					
CAKF	40	CALAMAGROSTIS ARUNDINACEA 'KARL FOERSTER'	FEATHER REED GRASS	2 GAL.	CONTAINER
MSML	6	MISCHANTHUS SINENSIS 'MORNING LIGHT'	SILVER VAREGATED MAIDEN GRASS	2 GAL.	CONTAINER
PAH	60	PENNISETUM ALOPECUROIDES 'HAMELN'	DWARF FOUNTAIN GRASS	2 GAL.	CONTAINER
	106				

NOTE: IF ANY DISCREPANCIES OCCUR BETWEEN AMOUNTS SHOWN IN THE PLAN AND THE PLANT LIST, THE PLAN SHALL DICTATE.

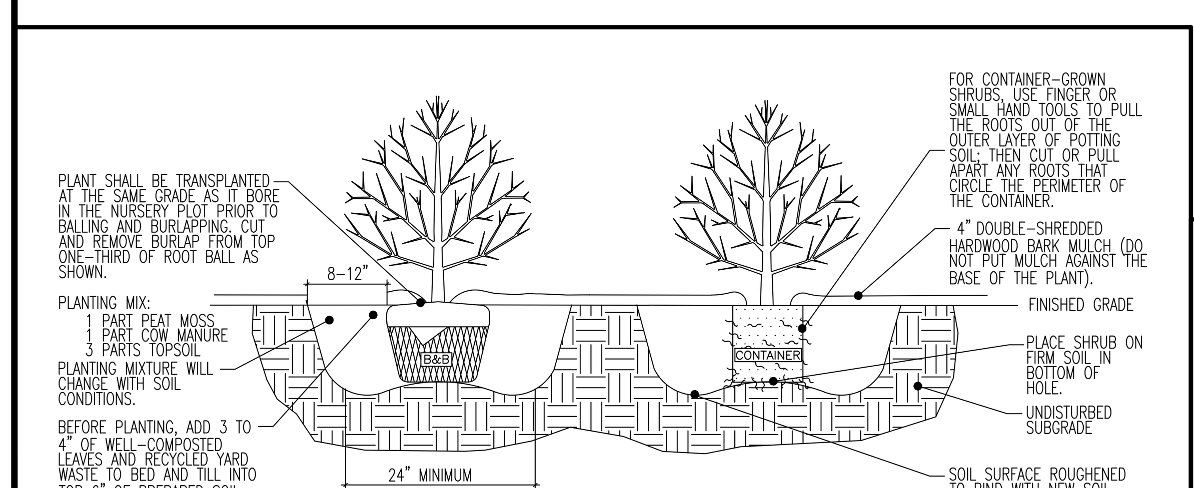

REFERENCE: ARCHITECTURAL GRAPHIC STANDARDS 1998 CUMULATIVE SUPPLEMENT.

DECIDUOUS AND EVERGREEN SHRUB PLANTING DETAIL

NOT TO SCALE

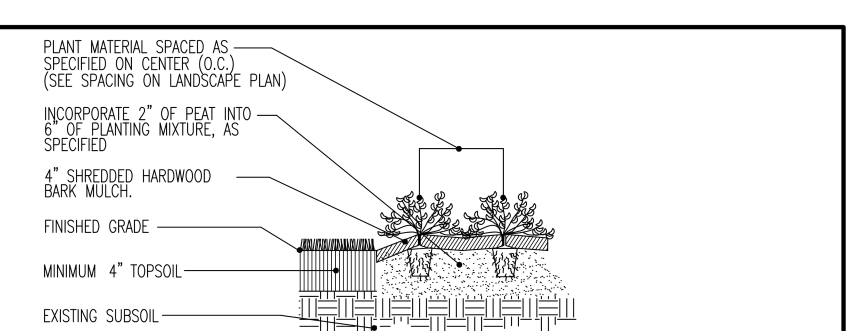

PERENNIAL/GROUND COVER PLANTING DETAIL

NOT TO SCALE

GRAPHIC SCALE

-20 0 10 20 40 80

(IN FEET)
1 INCH = 20 FT.

REV.	DATE	COMMENTS	BY
1	08/04/22	REVISED PER PLANNING BOARD COMMENTS	NPL

THIS PLAN SET IS FOR PERMITTING PURPOSES ONLY AND MAY NOT BE USED FOR CONSTRUCTION

DRAWN BY: NPL
DESIGNED BY: NPL
CHECKED BY: DTS
CHECKED BY: –

PROJECT: **WENESCO YORKTOWN, LLC**
PROPOSED DRIVE-THRU WENDY'S RESTAURANT
TAX LOT 36.06-2-76
3399 CROMPOND ROAD (US ROUTE 202 / N.Y.S.R. 35)
TOWN OF YORKTOWN, WESTCHESTER COUNTY, NEW YORK

811 Know what's below. Call before you dig.
PROTECT YOURSELF
ALL STATES REQUIRE NOTIFICATION OF EXCAVATORS, DESIGNERS, OR ANY PERSON PREPARING TO DISTURB THE EARTH'S SURFACE ANYWHERE IN ANY STATE
FOR STATE SPECIFIC DIRECT PHONE NUMBERS VISIT: WWW.CALL811.COM

DYNAMIC ENGINEERING
LAND DEVELOPMENT CONSULTING • PERMITTING
GEOTECHNICAL • ENVIRONMENTAL
TRAFFIC • SURVEY • PLANNING & ZONING
245 Main Street, Suite 110
Chester, NJ 07930
T: 908.879.9229 | F: 908.879.0222
Offices conveniently located at:
Lake Como, New Jersey • T: 732.974.0198
Chester, New Jersey • T: 908.879.9229
Newark, New Jersey • T: 973.755.7200
Toms River, New Jersey • T: 732.678.0000
Newtown, Pennsylvania • T: 267.685.0276
Philadelphia, Pennsylvania • T: 215.253.4888
Bethlehem, Pennsylvania • T: 610.598.4400
Allen, Texas • T: 972.534.2100
Houston, Texas • T: 281.789.6400
Austin, Texas • T: 512.646.2646
Delray Beach, Florida • T: 561.921.8570
www.dynamicec.com

DANIEL T. SEHNAL
PROFESSIONAL ENGINEER
NEW YORK LICENSE No. 099106

JOSEPH G. JAWORSKI
PROFESSIONAL ENGINEER
NEW YORK LICENSE No. 075707

TITLE: LANDSACPE PLAN

SCALE: (H) 1"=20' (V)
DATE: 06/27/2022
PROJECT No: 1329-99-006
SHEET No: 4 OF 5
Rev. #: 1

Plotted: 08/15/22 – 1:20 PM, By: nleloia
File: P:\DECPC PROJECTS\1329 Wenesco Restaurant Systems\99-006 Yorktown NY\Dwg\Site Plans\D1329990006SL1.dwg, ---> 04 LANDSACPE PLAN

COPYRIGHT © 2022 – DYNAMIC ENGINEERING CONSULTANTS, PC – ALL RIGHTS RESERVED

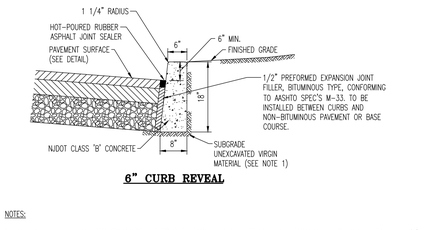

6" CURB REVEAL

NOTES:

1. ANY EXCAVATION BELOW DESIRED GRADE DUE TO OVER EXCAVATION OR WET SOIL CONDITIONS SHALL BE BACKFILLED WITH 3/4" CLEAN CRUSHED STONE. ALL SUBGRADES SHALL BE APPROVED BY THE TOWNSHIP ENGINEER PRIOR TO POURING.
2. TRANSVERSE JOINTS 1/2" WIDE SHALL BE INSTALLED IN THE CURB 20'-0" APART AND SHALL BE FILLED WITH PREFORMED, BITUMINOUS-IMPREGNATED FIBER JOINT FILLER, COMPLYING WITH THE REQUIREMENTS OF AASHTOM-213, RECESSED 1/4" FROM THE FRONT FACE AND TOP OF THE CURB.
3. DUMMY JOINTS (FORMED) SHALL BE INSTALLED MIDWAY BETWEEN EXPANSION JOINTS.
4. WIDTH OF JOINT FILLER STRIP EQUAL TO THE THICKNESS OF THE PAVEMENT LESS 1/2".
5. THESE SPECIFICATIONS ALSO MEET RSIS DESIGN STANDARDS.

CONCRETE CURB DETAIL

NOT TO SCALE

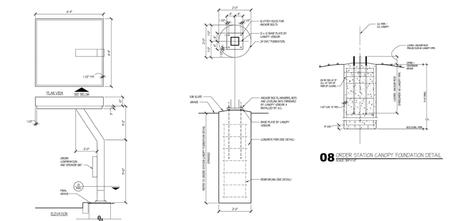

NOTE: REFER TO ARCHITECTURAL PLANS FOR ADDITIONAL DETAILS

ORDER STATION CANOPY DETAIL

NOT TO SCALE

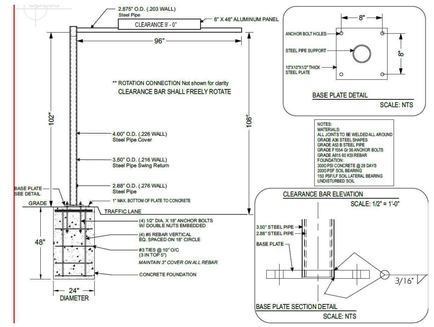

CLEARANCE BAR DETAIL

NOT TO SCALE

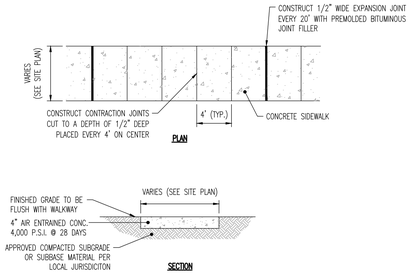

NOTE:

1. MAX. CROSS SLOPE 1/4" PER FOOT PITCHED TOWARDS ROADWAY.
2. PROVIDE 1/2" WIDE PREMOLDED BITUMINOUS EXPANSION JOINT AT 20' INTERVALS.
3. REFER TO SITE PLAN FOR SIDEWALK WIDTH.
4. PROVIDE A BROOM FINISH TO PROVIDE A SLIP RESISTANT WEARING SURFACE IN ACCORDANCE WITH A.D.A. REGULATIONS. FINISH THE EDGES OF THE GROOVES USING AN EDGING TOOL WITH A 1/4" RADIUS.

CONCRETE SIDEWALK DETAIL

NOT TO SCALE

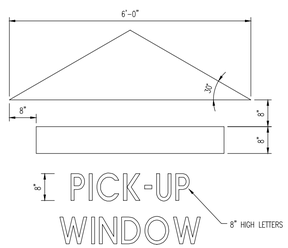

PICK-UP WINDOW DIRECTIONAL ARROW DETAIL

NOT TO SCALE

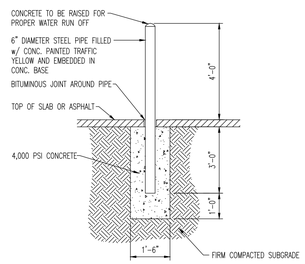

NOTES:

1. BOLLARD MUST RESIST A FORCE OF 12,000 POUNDS APPLIED 36" ABOVE THE DRIVING SURFACE.
2. BOLLARDS REQUIRED AS DEPICTED ON SITE PLAN DRAWINGS. TYPICALLY LOCATED AT BUILDING CORNERS, TRANSFORMERS, FIRE HYDRANTS, EXTERIOR WATER METER, GAS METER, FIRE DEPARTMENT CONNECTIONS, AND TRASH ENCLOSURES.

06/14 - RMJG

6" BOLLARD DETAIL

NOT TO SCALE

MENU PRE-SELL BOARD DETAIL

NOT TO SCALE

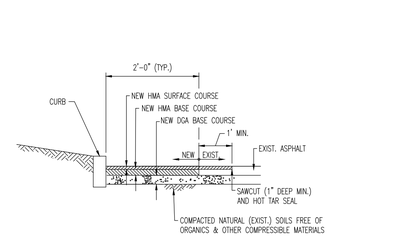

06/2022 JGJ/DJS

FULL DEPTH PAVEMENT REPAIR DETAIL

NOT TO SCALE

58" FLUSH MOUNT CAMEO — 58" CAMEO — NSS#: 90013306

MATERIALS & SPECS — Actual: 17.57 ft² | Nearest Rectangle: 29.29 ft²

1. Letter returns - 4¾" deep .040 aluminum.
2. Illumination - white LEDs.
3. Appropriate fasteners for wall material (Shown Thru Bolted)

- PMS 186c - hair, freckles
- PMS 201c - hair, outline
- PMS 698c - face, neck
- PMS 299c - bow, shirt, brooch
- PMS 439c - outline
- White

*Total electrical load: 1.2 amps.
Requires (1) 20 amp circuit @ 120V/60Hz (all components UL listed)

Wendy's — rev.1/17

National Sign Systems — 4200 Lyman Court, Hilliard Ohio, 43026 — 800.544.6726, 614.850.2540 — sales@natsignsys.com, nationalsignsystems.com — ACCREDITED BUSINESS — MADE IN USA

FLUSH MOUNTED 58" WENDY'S CAMEO SIGN DETAIL

NOT TO SCALE

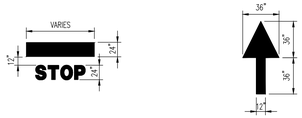

NOTE: ARROWS AND WORDS CAN BE ARRANGED IN OTHER COMBINATIONS THAN THOSE ILLUSTRATED HERE TO ACHIEVE DESIRED RESULT. ALL PAINT TO BE THERMOPLASTIC.

PAINTED MARKING DETAILS

NOT TO SCALE

STANDARD INSTALLATION DETAIL
DESIGN CRITERIA
90 M.P.H. WIND LOAD / EXPOSURE B / UBC
SOIL COMPACTNESS=2,000 PSF
CONCRETE FOUNDATION=4000 PSI, 28 DAY MIN. COMPRESSIVE STRENGTH
(IF LOCAL CONDITIONS REQUIRE ADJUSTMENTS TO THE ABOVE CRITERIA IT IS THE RESPONSIBILITY OF THE SIGN INSTALLER TO OBTAIN ADEQUATE ENGINEERING SPECIFICATIONS)

EXTERIOR MENU
MODEL U0802
RM-5200
51.92 SF

1 CIRCUIT
TOTAL LOAD 4.55 AMPS

LAMPS AND BALLASTS
10 - 48" LAMPS; 1 - 84" LAMP
QTY 1 (2.75 AMP) - BALLASTS
QTY 1 (1.80 AMP) - BALLASTS

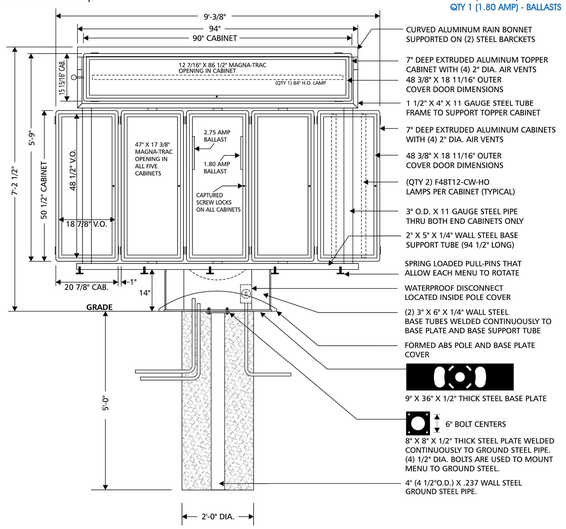

NOTE: ALL ELECTRICAL WORK TO COMPLY WITH 2008 NEC

CUSTOM SIGN CENTER, INC. 3200 VALLEYVIEW DRIVE COLUMBUS, OHIO 43204 800-522-2934
DESIGNER: MDA **DATE:** 3/25/10

MENU BOARD DETAIL

NOT TO SCALE

FLUSH MOUNT CHANNEL LETTERS — WIL36NC

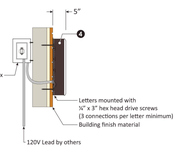

MATERIALS & SPECS — Actual: 8.78 ft² | Nearest Rectangle: 21.51 ft²

1. Illumination - white LEDs*
2. Letter faces - thermoformed white acrylic
4. Letter & Cameo returns - 4¾" deep .040 aluminum

- PMS 439c - outline
- White

Wordmark available in Red NSS#: 90012901 — Wendy's — rev.1/17

National Sign Systems — 4200 Lyman Court, Hilliard Ohio, 43026 — 800.544.6726, 614.850.2540 — sales@natsignsys.com, nationalsignsystems.com — ACCREDITED BUSINESS — MADE IN USA

FLUSH MOUNTED 36" WENDY'S SCRIPT SIGN DETAIL

NOT TO SCALE

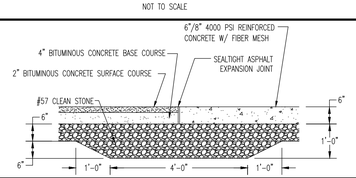

CONCRETE TO ASPHALT TRANSITION DETAIL

NOT TO SCALE

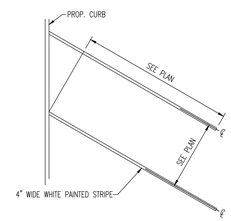

WHITE PAINTED ANGLED PARKING STRIPING DETAIL

NOT TO SCALE

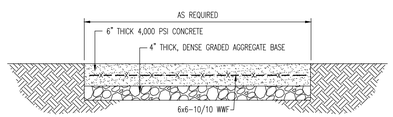

NOTES:

1. CONCRETE SHALL HAVE A MINIMUM COMPRESSIVE STRENGTH OF 4,000 PSI AT 28 DAYS WITH A MINIMUM CEMENT CONTENT OF 600 POUNDS PER CUBIC YARD FOR ALL FOOTINGS.
2. ALL CONCRETE SHALL HAVE A SLUMP OF NO GREATER THAN 4" TO WITHIN A TOLERANCE OF 1".
3. ALL EXPOSED CONCRETE SHALL BE AIR-ENTRAINED, (6% WITHIN 1% TOLERANCE), CONFORMING TO ASTM C260.
4. REINFORCING STEEL BARS SHALL BE A MINIMUM ASTM A615, GRADE 60, AND SHALL BE FIELD WIRED IN PLACE.
5. ALL FRAMEWORK, AND PLACEMENT OF CONCRETE SHALL COMPLY WITH GOOD CONSTRUCTION PRACTICES AND BE IN ACCORDANCE WITH ALL LOCAL GOVERNING CODES AND REGULATIONS, AS WELL AS THE ACI AND UNIFORM BUILDING CODE.
6. EXPANSION JOINTS 1/2" WIDE OF PREMOULDED BITUMINOUS MATERIALS SHALL BE INSTALLED.

CONCRETE PAD DETAIL

NOT TO SCALE

COPYRIGHT © 2022 - DYNAMIC ENGINEERING CONSULTANTS, PC - ALL RIGHTS RESERVED

Plotted: 08/15/22 - 12:41 PM, By: nieloa
File: P:\DESCPC PROJECTS\1329 Wenesco Restaurant Systems\99-006 Yorktown NY\Dwg\Site Plans\D13299006SD1.dwg, ---> 05 CONSTRUCTION DETAILS

DYNAMIC ENGINEERING CONSULTANTS, PC
LAND DEVELOPMENT • TRANSPORTATION • SURVEY • TRAFFIC

REV.	DATE	COMMENTS	BY
1	08/04/22	REVISED PER PLANNING BOARD COMMENTS	NPL

THIS PLAN SET IS FOR PERMITTING PURPOSES ONLY AND MAY NOT BE USED FOR CONSTRUCTION

DRAWN BY: NPL | DESIGNED BY: NPL | CHECKED BY: DTS | CHECKED BY: –

PROJECT: **WENESCO YORKTOWN, LLC**
PROPOSED DRIVE-THRU WENDY'S RESTAURANT
TAX LOT 36.06-2-76
3399 CROMPOND ROAD (US ROUTE 202 / N.Y.S.R. 35)
TOWN OF YORKTOWN, WESTCHESTER COUNTY, NEW YORK

811 Know what's below. Call before you dig.
PROTECT YOURSELF
ALL STATES REQUIRE NOTIFICATION OF EXCAVATORS, DESIGNERS, OR ANY PERSON PREPARING TO DISTURB THE EARTH'S SURFACE ANYWHERE IN ANY STATE.
FOR STATE SPECIFIC DIRECT PHONE NUMBERS VISIT: WWW.CALL811.COM

DYNAMIC ENGINEERING
LAND DEVELOPMENT CONSULTING • PERMITTING
GEOTECHNICAL • ENVIRONMENTAL
TRAFFIC • SURVEY • PLANNING & ZONING
245 Main Street, Suite 110
Chester, NJ 07930
T: 908.879.9229 | F: 908.879.0222
Offices conveniently located at:
Lake Hopatcong, New Jersey • T: 973.770.6778
Chester, New Jersey • T: 908.879.9229
Newark, New Jersey • T: 973.733.7200
Toms River, New Jersey • T: 732.270.5000
Newtown, Pennsylvania • T: 267.685.1076
Philadelphia, Pennsylvania • T: 215.563.4088
Bethlehem, Pennsylvania • T: 610.398.4400
Allen, Texas • T: 972.234.2720
Houston, Texas • T: 281.789.6400
Austin, Texas • T: 512.646.5441
Delray Beach, Florida • T: 561.921.8570
www.dynamicec.com

DANIEL T. SEHNAL
PROFESSIONAL ENGINEER
NEW YORK LICENSE No. 099106

JOSEPH G. JAWORSKI
PROFESSIONAL ENGINEER
NEW YORK LICENSE No. 075707

TITLE: CONSTRUCTION DETAILS

SCALE: (H) AS (V) SHOWN | DATE: 06/27/2022
PROJECT No: 1329-99-006

SHEET No: 5 OF 5 | Rev. #: 1

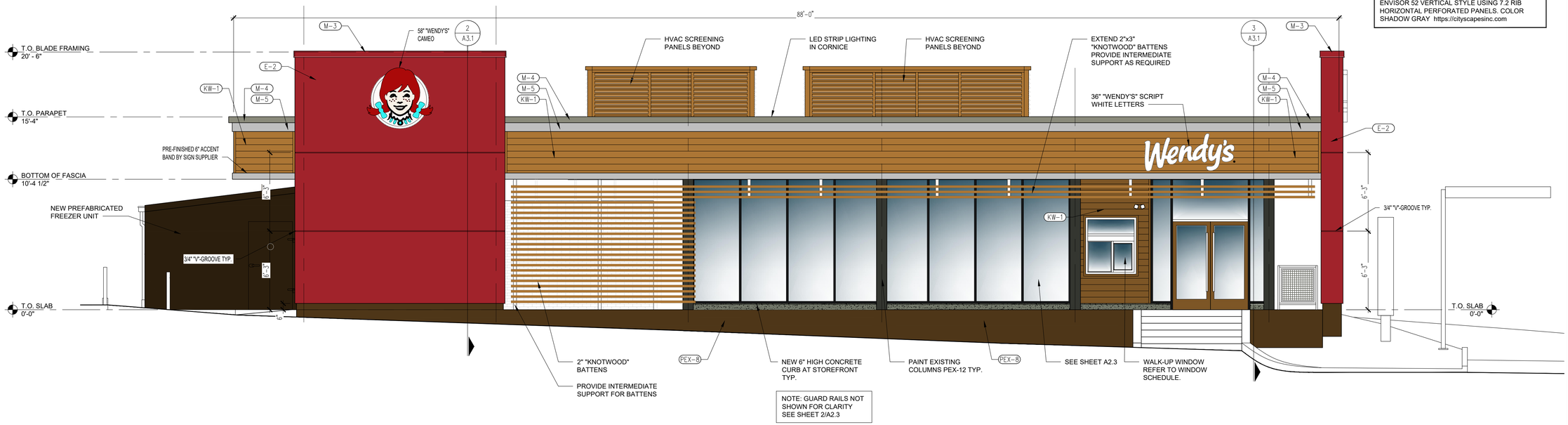

NOTE: SCREEN SYSTEM CORRESPONDS TO THE ENVISOR 52 VERTICAL STYLE USING 7.2 RIB HORIZONTAL PERFORATED PANELS. COLOR SHADOW GRAY https://cityscapesinc.com

NOTE: GUARD RAILS NOT SHOWN FOR CLARITY SEE SHEET 2/A2.3

01 SIDE ELEVATION MAIN ENTRY

SCALE: 1/4" = 1'-0"

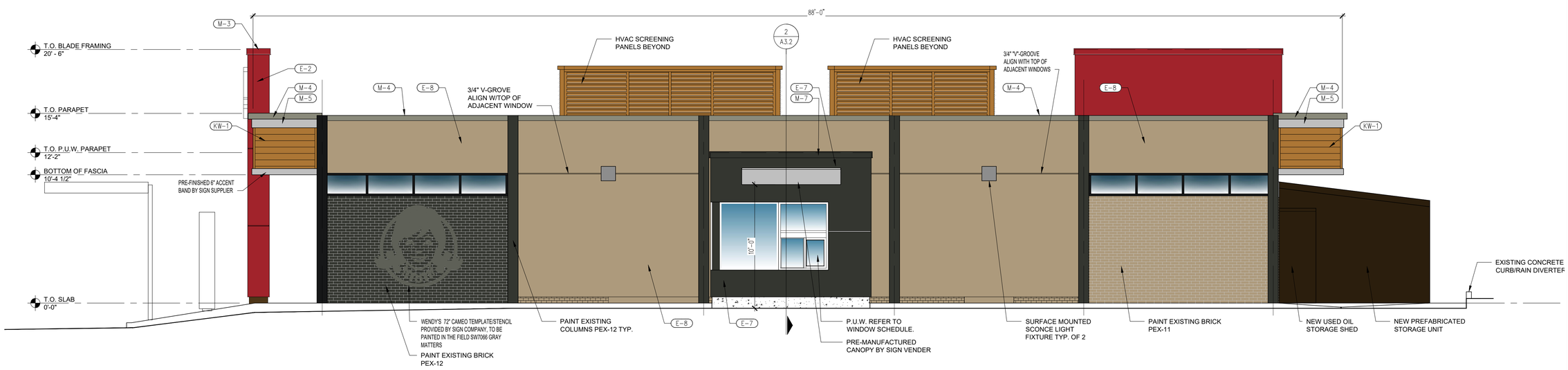

02 DRIVE THRU ELEVATION

SCALE: 1/4" = 1'-0"

SITE NUMBER:	13729
BASE MODEL:	CONVERSION
ASSET TYPE:	FRANCHISE
CLASSIFICATION:	FREESTANDING
OWNER:	WENESCO RESTAURANTS
BASE VERSION:	2021
UPGRADE CLASSIFICATION:	NEW BUILD
PROJECT YEAR:	2022
DESIGN TYPE:	2.0 (UM BRIGHT)
DRAWING RELEASE:	SPRING 2021

CDG
The Chesapeake Design Group Architects, Incorporated

419 North Charles Street
Baltimore, Maryland 21201
t: 410.837.3622 f: 410.837.3621

SEAL

PROFESSIONAL CERTIFICATION:

I HEREBY CERTIFY THAT THESE DOCUMENTS WERE PREPARED OR APPROVED BY ME, AND THAT I AM A DULY LICENSED ARCHITECT UNDER THE LAWS OF THE STATE OF NY

LICENSE NO. 20040-1
EXPIRATION DATE 7/31/24

PROJECT TYPE:
CONVERSION
NEW BUILD

REV.	DATE	DESCRIPTION

ISSUE DATE 04/11/22

PROJECT NUMBER 22IA01

DRAWN BY CDG

CHECKED BY CDG

WENDY'S STORE NO. 13729
3399 CROMPOND ROAD
YORKTOWN HEIGHTS, NY 10598

GAS HEAT / GAS WATER HEATER
GAS FRYERS / ELECTRIC GRILLES

SHEET NAME
EXTERIOR ELEVATIONS

SHEET NUMBER
A2.1

PERMIT SET 04/11/22

A2.1 WARREN 8/24/2022 3399 Crompond Rd, Yorktown Hghts NY_ELEV-EXT.DWG

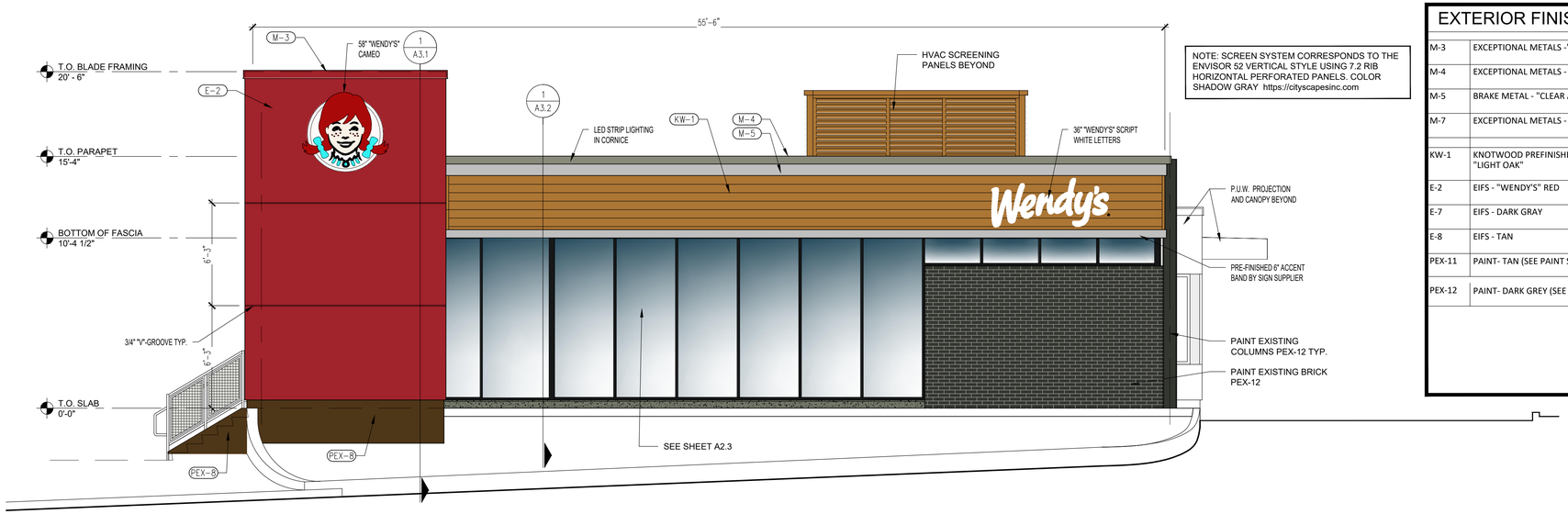

NOTE: SCREEN SYSTEM CORRESPONDS TO THE ENVISOR S2 VERTICAL STYLE USING 7.2 RIB HORIZONTAL PERFORATED PANELS. COLOR SHADOW GRAY https://cityscapesinc.com

EXTERIOR FINISH SCHEDULE

M-3	EXCEPTIONAL METALS -"BRIGHT RED"
M-4	EXCEPTIONAL METALS - "SILVER METALLIC"
M-5	BRAKE METAL - "CLEAR ANNODIZED"
M-7	EXCEPTIONAL METALS - "CUSTOM DARK GREY"
KW-1	KNOTWOOD PREFINISHED ALUMINUM SIDING MATERIAL "LIGHT OAK"
E-2	EIFS - "WENDY'S" RED
E-7	EIFS - DARK GRAY
E-8	EIFS - TAN
PEX-11	PAINT- TAN (SEE PAINT SCHEDULE)
PEX-12	PAINT- DARK GREY (SEE PAINT SCHEDULE)

01 FRONT ELEVATION-CROMPOUND ROAD

SCALE: 1/4" = 1'-0"

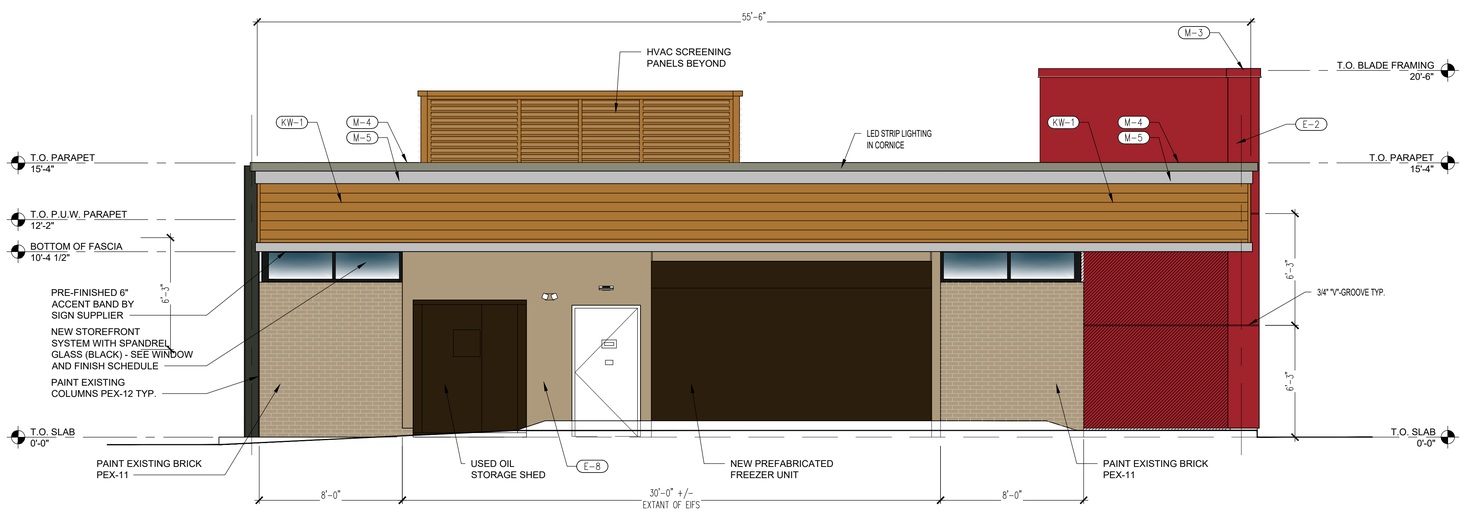

02 REAR ELEVATION

SCALE: 1/4" = 1'-0"

SITE NUMBER:	13729
BASE MODEL:	CONVERSION
ASSET TYPE:	FRANCHISE
CLASSIFICATION:	FREESTANDING
OWNER:	WENESCO RESTAURANTS
BASE VERSION:	2021
UPGRADE CLASSIFICATION:	NEW BUILD
PROJECT YEAR:	2022
DESIGN TYPE:	2.0 (UM BRIGHT)
DRAWING RELEASE:	SPRING 2021

CDG
The Chesapeake Design Group Architects, Incorporated

419 North Charles Street
Baltimore, Maryland 21201
t: 410.837.3622 f: 410.837.3621

SEAL

PROFESSIONAL CERTIFICATION:

I HEREBY CERTIFY THAT THESE DOCUMENTS WERE PREPARED OR APPROVED BY ME, AND THAT I AM A DULY LICENSED ARCHITECT UNDER THE LAWS OF THE STATE OF NY

LICENSE NO. 20040-1
EXPIRATION DATE 7/31/24

PROJECT TYPE:
CONVERSION
NEW BUILD

Wendy's

REV.	DATE	DESCRIPTION

ISSUE DATE 04/11/22

PROJECT NUMBER 22IA01

DRAWN BY CDG

CHECKED BY CDG

WENDY'S STORE NO: 13729
3399 CROMPOND ROAD
YORKTOWN HEIGHTS, NY 10598

GAS HEAT / GAS WATER HEATER
GAS FRYERS / ELECTRIC GRILLES

SHEET NAME
EXTERIOR ELEVATIONS

SHEET NUMBER
A2.2

PERMIT SET 04/11/22

3399 Crompond Rd, Yorktown Hghts NY_ELEV-EXT.DWG 8/24/2022 WARREN A2.2

Staples Plaza
BESS Expansion

THE STAPLES PLAZA BATTERY ENERGY STORAGE PROJECT

PARTIAL ZONING MAP, YORKTOWN HEIGHTS, NY

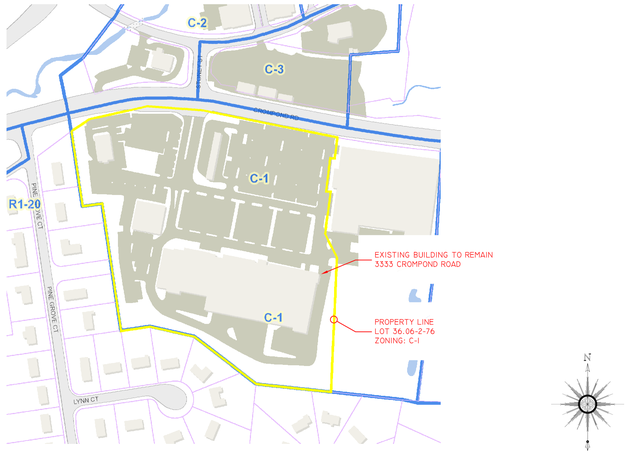

PLOT PLAN, NOT TO SCALE

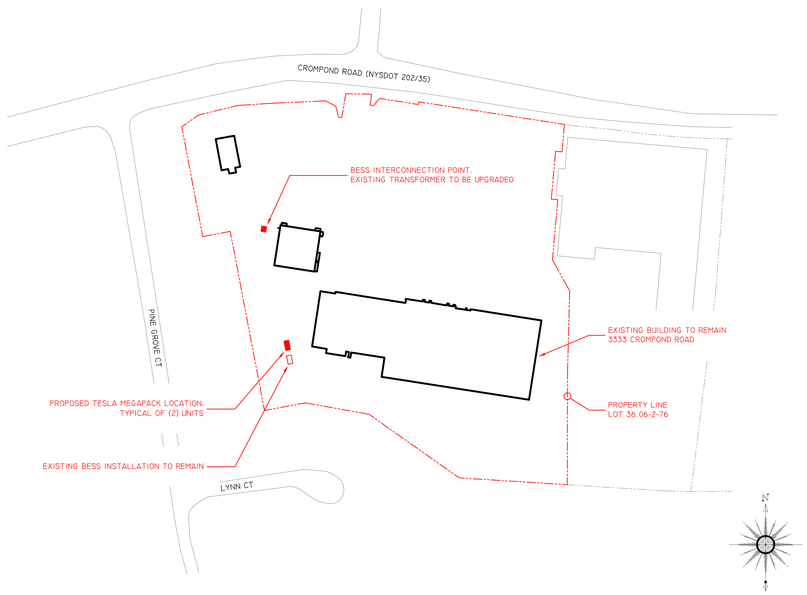

PARTIAL MAP VIEW, YORKTOWN HEIGHTS, NEW YORK

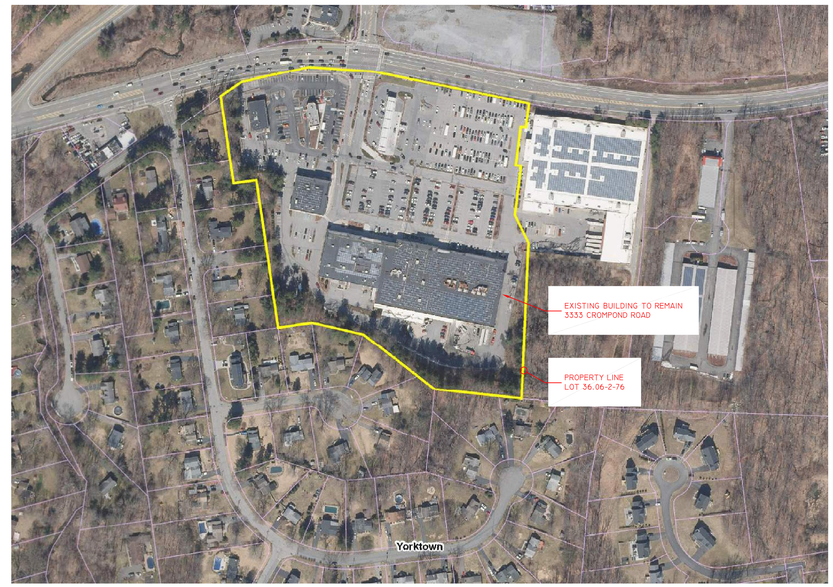

PROJECT DESCRIPTION

- THE PROJECT CONSISTS OF FURNISHING, INSTALLING, COMMISSIONING AND STARTING UP A BATTERY ENERGY STORAGE SYSTEM AT THE PROJECT SITE KNOWN AS THE STAPLES PLAZA IN YORKTOWN HEIGHTS.
- THE PROPOSED BATTERY ENERGY STORAGE SYSTEM (BESS) IS TO BE TWO (2) PRE-MANUFACTURED TESLA MEGAPACK UNITS RATED FOR A TOTAL CAPACITY OF 6,160.8 kWh.
- ADDITIONALLY, PART OF THE PROPOSED SCOPE OF WORK INCLUDES THE UPGRADE OF AN EXISTING TRANSFORMER.
- THE INTENT OF THIS SET OF DOCUMENTS IS TO CONVEY TO THE TOWN BOARD AND CODE OFFICIALS AS CLEARLY AND COMPREHENSIVELY AS POSSIBLE THE SCOPE OF THE PROJECT AND TO UNDERSTAND THE REQUIREMENTS IN ORDER TO HAVE A FULLY COMPLIANT INSTALLATION.

BUILDING INFORMATION

PROPERTY ADDRESS:	3333 CROMPOND ROAD YORKTOWN HEIGHTS, NEW YORK 10598
BUILDING OWNER:	UB YORKTOWN, LLC 321 RAILROAD AVE GREENWICH, CONNECTICUT 06830
PARCEL ID:	36.06-2-76
PARCEL USE CODE:	453
PROPERTY CLASS:	LARGE RETAIL OUTLETS
ZONING:	C-1, PLANNED RETAIL BUSINESS
ACREAGE:	15.95 ACRES

PROPOSED BATTERY ENERGY STORAGE DETAILS

MANUFACTURER:	TESLA
BATTERY SERIES:	MEGAPACK
TECHNOLOGY:	LITHIUM-ION CELLS
RATED ENERGY CAP.:	6,160.8 kWH, 4-HOUR STANDARD
AC VOLTAGE:	480 VOLTS AC, 3-PHASE
NOMINAL FREQUENCY:	60 Hz
INGRESS RATING:	IP66/NEMA 3R - MAIN ENCLOSURE IP20 - THERMAL SYSTEM
MAXIMUM WEIGHT:	56,000 LBS PER UNIT
DIMENSIONS:	W: 282 $\frac{1}{2}$ INCHES D: 65 $\frac{1}{2}$ INCHES H: 99 $\frac{1}{2}$" INCHES
REGULATORY:	NRTL LISTED TO UL 1642

ENERGY ENGINEERING. PIONEERED.
485 ST JOHNS PLACE, SUITE 2A
BROOKLYN, NY, 11238
PH: 917.600.0600
WWW.MAYFLOWERPLLC.COM
MAY FLOWER
MAYFLOWER ENERGY ENGINEERING

DOB STAMP & SIGNATURES

NOT FOR CONSTRUCTION

DOB SCAN

ENGINEER SHALL NOT HAVE CONTROL OR CHARGE OF AND SHALL NOT BE RESPONSIBLE FOR CONSTRUCTION MEANS, METHODS, TECHNIQUES, SEQUENCES, OR PROCEDURES, OR FOR SAFETY PRECAUTIONS AND PROGRAMS IN CONNECTION WITH THE WORK, FOR THE ACTS OR OMISSIONS OF THE CONTRACTOR, SUB-CONTRACTORS, OR ANY OTHER PERSONS PERFORMING ANY OF THE WORK, OR FOR THE FAILURE OF ANY OF THEM TO CARRY OUT THE WORK IN ACCORDANCE WITH THE CONTRACT DOCUMENTS.

THIS PLAN IS APPROVED ONLY FOR WORK INDICATED ON THE APPLICATION SPECIFICATION SHEET. ALL OTHER MATTERS SHOWN ARE NOT TO BE RELIED UPON OR TO BE CONSIDERED AS EITHER BEING APPROVED OR IN ACCORDANCE WITH APPLICABLE CODES.

PROJECT NAME:
STAPLES PLAZA SHOPPING CENTER
BATTERY ENERGY STORAGE PROJECT
3333 CROMPOND ROAD
YORKTOWN HEIGHTS, NY
10598

REV	DATE	DESCRIPTION
-	-	-
-	-	-
-	-	-
2	08.26.2022	PER PLANNING BOARD COMMENTS
1	03.21.2022	ISSUED FOR TOWN'S REVIEW

DRAWING TITLE
PROJECT DESCRIPTION, BUILDING INFORMATION SITE PLAN AND EQUIPMENT SCHEDULE

SEAL & SIGNATURE

BERNARDO SUAREZ
NYS PROFESSIONAL ENGINEER
LIC. NO. 090960

PROJECT NO: STAPLES PLAZA BESS
FILE: STAPLES PLAZA_BESS PROJECT.DWG
DRAWN BY: BB
CHECKED BY: BB
DRAWING NO,

S-001.00

SHEET 1 OF 4

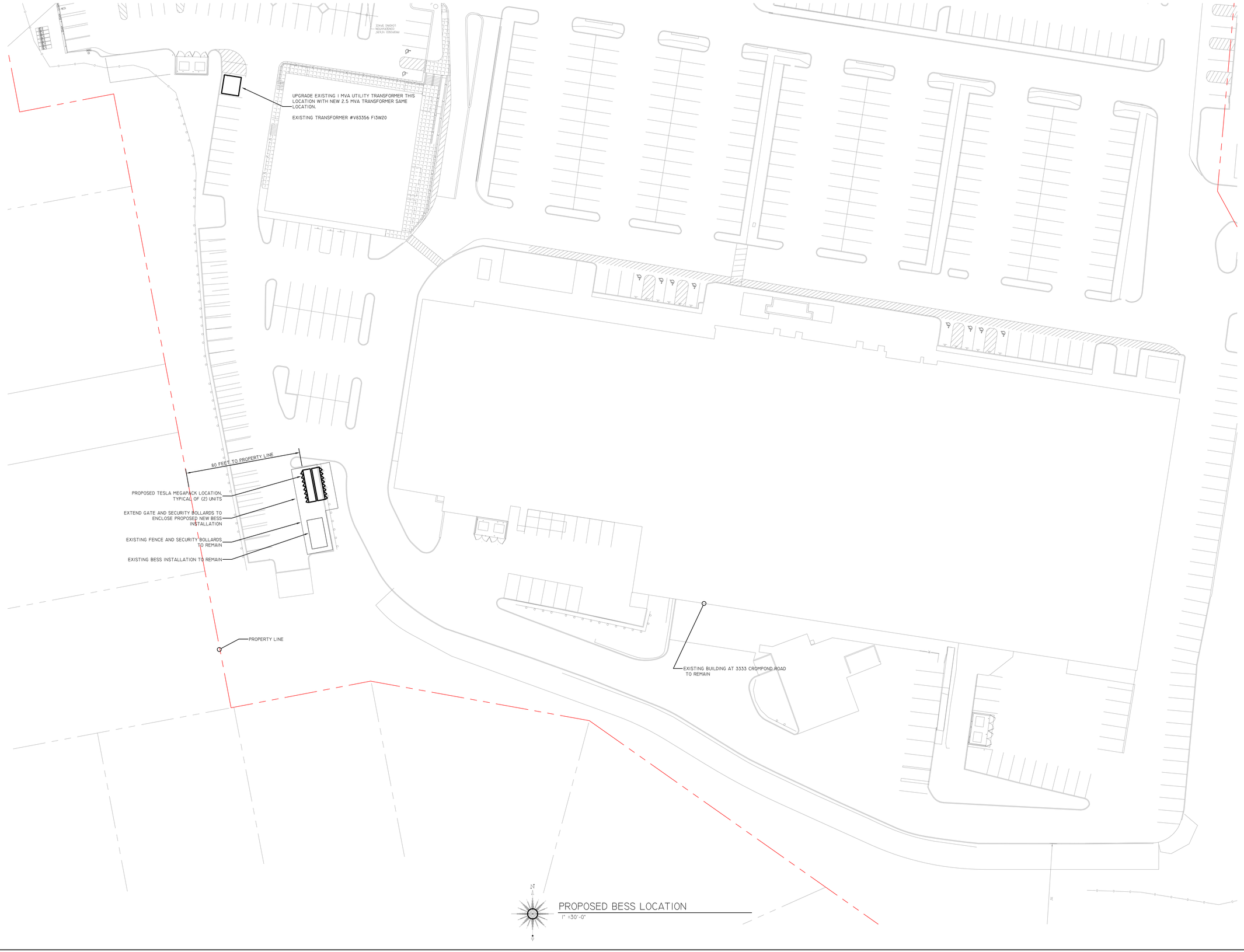

PROPOSED BESS LOCATION
1" =30'-0"

ENERGY ENGINEERING. PIONEERED.
485 ST JOHNS PLACE, SUITE 2A
BROOKLYN, NY, 11238
PH: 917.600.0600
WWW.MAYFLOWERPLLC.COM
MAY FLOWER
MAYFLOWER ENERGY ENGINEERING

DOB STAMP & SIGNATURES

NOT FOR CONSTRUCTION

DOB SCAN

ENGINEER SHALL NOT HAVE CONTROL OR CHARGE OF AND SHALL NOT BE RESPONSIBLE FOR CONSTRUCTION MEANS, METHODS, TECHNIQUES, SEQUENCES, OR PROCEDURES, OR FOR SAFETY PRECAUTIONS AND PROGRAMS IN CONNECTION WITH THE WORK, FOR THE ACTS OR OMISSIONS OF THE CONTRACTOR, SUB-CONTRACTORS, OR ANY OTHER PERSONS PERFORMING ANY OF THE WORK, OR FOR THE FAILURE OF ANY OF THEM TO CARRY OUT THE WORK IN ACCORDANCE WITH THE CONTRACT DOCUMENTS.

THIS PLAN IS APPROVED ONLY FOR WORK INDICATED ON THE APPLICATION SPECIFICATION SHEET. ALL OTHER MATTERS SHOWN ARE NOT TO BE RELIED UPON OR TO BE CONSIDERED AS EITHER BEING APPROVED OR IN ACCORDANCE WITH APPLICABLE CODES.

PROJECT NAME:
STAPLES PLAZA SHOPPING CENTER
BATTERY ENERGY STORAGE PROJECT
3333 CROMPOND ROAD
YORKTOWN HEIGHTS, NY
10598

REV	DATE	DESCRIPTION
-	-	-
-	-	-
-	-	-
2	08.26.2022	PER PLANNING BOARD COMMENTS
1	03.21.2022	ISSUED FOR TOWN'S REVIEW

DRAWING TITLE

SITE PLAN, PROPOSED BESS LOCATION

SEAL & SIGNATURE

BERNARDO BURGOS
NYS PROFESSIONAL ENGINEER
L.C.C. NO. 099960

PROJECT NO: STAPLES PLAZA BESS
FILE: STAPLES PLAZA_BESS PROJECT.DWG
DRAWN BY: BB
CHECKED BY: BB
DRAWING NO.

S-100.00

SHEET 2 OF 4

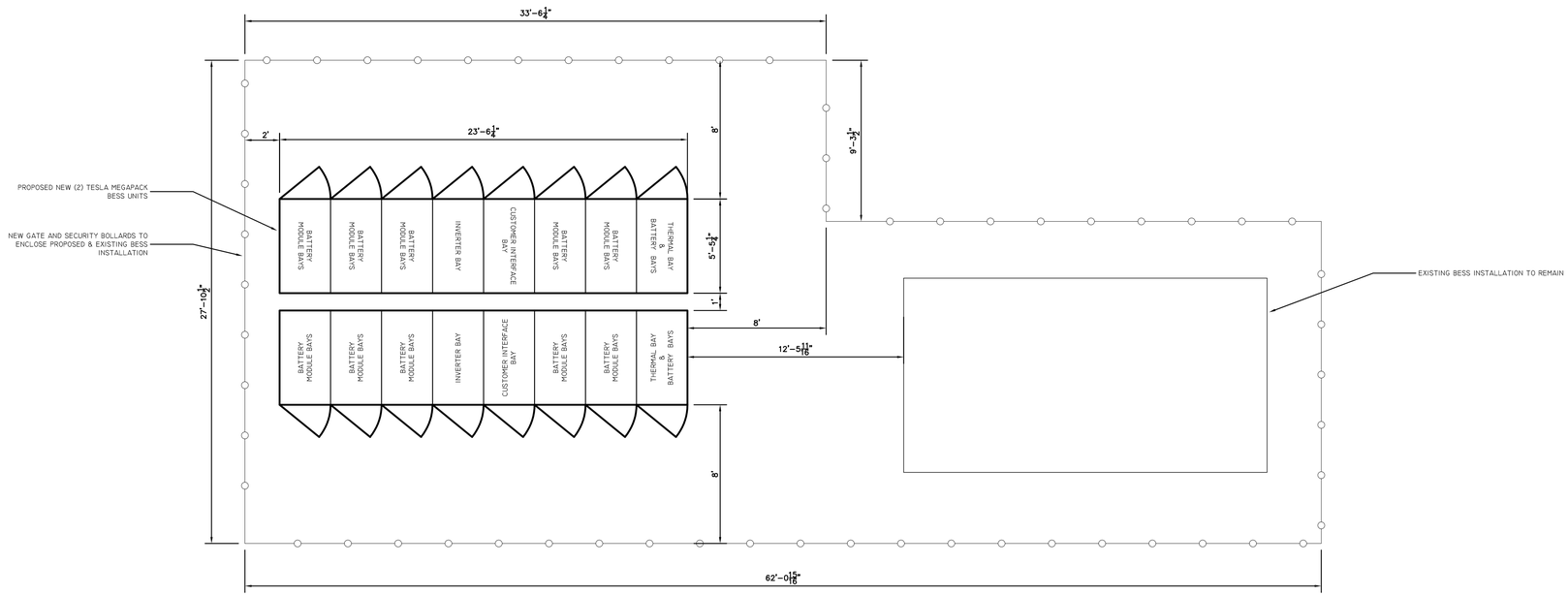

BATTERY ENERGY STORAGE UNIT DIMENSIONS

1/4"= 1'-0"

ENERGY ENGINEERING. PIONEERED.

485 ST JOHNS PLACE, SUITE 2A
BROOKLYN, NY, 11238
PH: 917.600.0600

WWW.MAYFLOWERPLLC.COM

MAY FLOWER

MAYFLOWER ENERGY ENGINEERING

DOB STAMP & SIGNATURES

NOT FOR CONSTRUCTION

DOB SCAN

ENGINEER SHALL NOT HAVE CONTROL OR CHARGE OF AND SHALL NOT BE RESPONSIBLE FOR CONSTRUCTION MEANS, METHODS, TECHNIQUES, SEQUENCES, OR PROCEDURES, OR FOR SAFETY PRECAUTIONS AND PROGRAMS IN CONNECTION WITH THE WORK, FOR THE ACTS OR OMISSIONS OF THE CONTRACTOR, SUB-CONTRACTORS, OR ANY OTHER PERSONS PERFORMING ANY OF THE WORK, OR FOR THE FAILURE OF ANY OF THEM TO CARRY OUT THE WORK IN ACCORDANCE WITH THE CONTRACT DOCUMENTS.

THIS PLAN IS APPROVED ONLY FOR WORK INDICATED ON THE APPLICATION SPECIFICATION SHEET. ALL OTHER MATTERS SHOWN ARE NOT TO BE RELIED UPON OR TO BE CONSIDERED AS EITHER BEING APPROVED OR IN ACCORDANCE WITH APPLICABLE CODES.

PROJECT NAME:

STAPLES PLAZA SHOPPING CENTER
BATTERY ENERGY STORAGE PROJECT
3333 CROMPOND ROAD
YORKTOWN HEIGHTS, NY
10598

REV	DATE	DESCRIPTION
-	-	-
-	-	-
-	-	-
2	08.26.2022	PER PLANNING BOARD COMMENTS
1	03.21.2022	ISSUED FOR TOWN'S REVIEW

DRAWING TITLE

PRODUCT SPECIFICATIONS & DIMENSIONS

SEAL & SIGNATURE

BERNARDO DIDESS
NYS PROFESSIONAL ENGINEER
LIC. NO. 090960

PROJECT NO: STAPLES PLAZA BESS
FILE: STAPLES PLAZA_BESS PROJECT.DWG
DRAWN BY: BB
CHECKED BY: BB
DRAWING NO.

S-200.00

SHEET 4 OF 4

THE STAPLES PLAZA BATTERY ENERGY STORAGE PROJECT

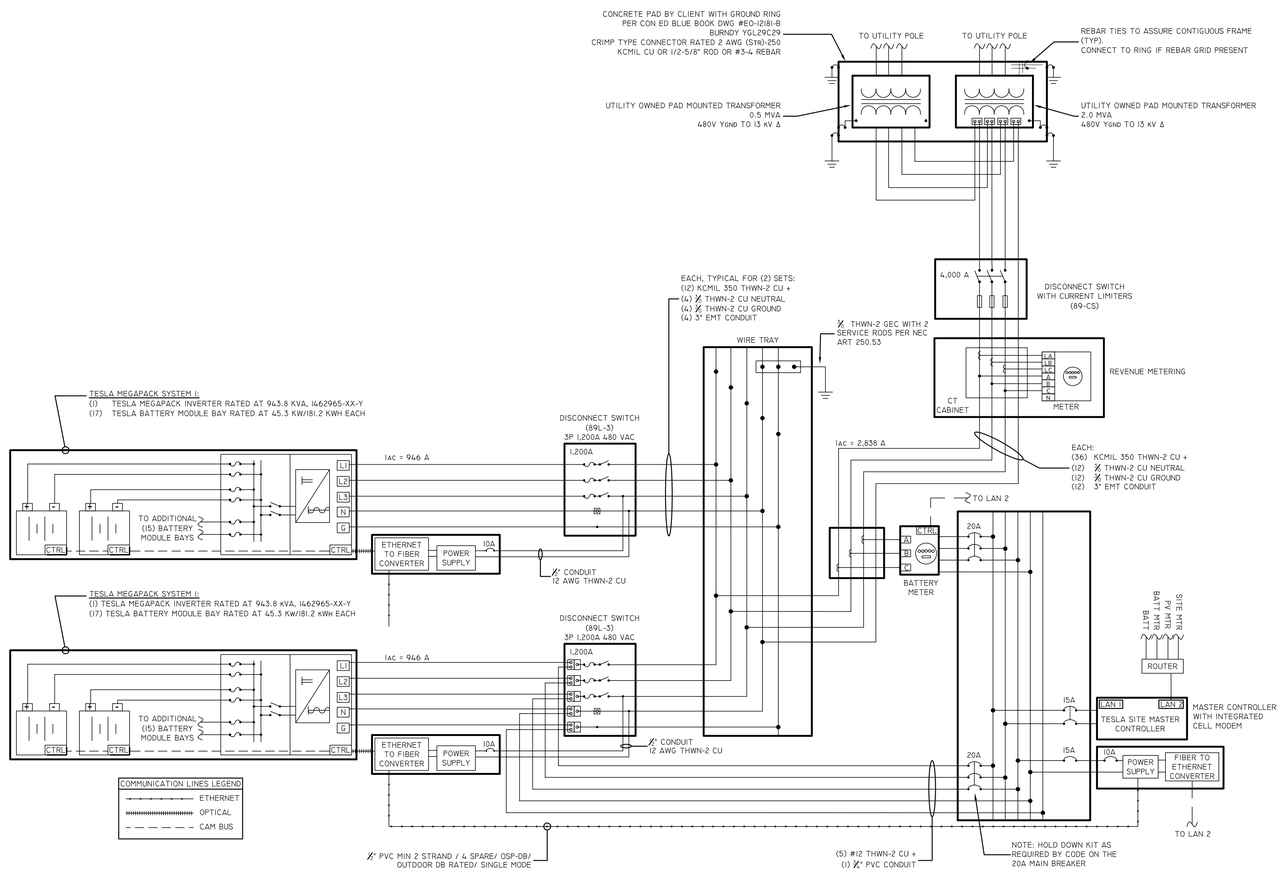

BESS ELECTRICAL DIAGRAM

N.T.S.

GENERAL NOTES:
1. THIS IS NOT A EO-10215 MODIFIED HT DESIGN.
2. 85 KIC RATED, GROUND FAULT DETECTION, SHUNT TRIP, PAD LOCKABLE.
3. ISOLATED DC GROUND IN ACCORDANCE TO NEC ART 690.35 (PV) AND ART 706.30 (D) (ENERGY STORAGE)

PROPOSED BATTERY ENERGY STORAGE DETAILS

MANUFACTURER:	TESLA
BATTERY SERIES:	MEGAPACK
TECHNOLOGY:	LITHIUM-ION CELLS
MEGAPACK RATING:	45.3 kW / 181.2 kWH PER MEGAPACK UNIT
NO. BATTERY PACKS:	17 BATTERY PACKS PER MEGAPACK UNIT
NO. OF INVERTERS:	01 PER MEGAPACK UNIT
INVERTER MODEL:	MEGAPACK 1462865-XX-Y (C002) <11 STAGE/17 PACK>
SYSTEM SIZE (DC):	770.1 KVA PER UNIT
SYSTEM SIZE (AC):	786.5 KVA, PER UNIT
AC VOLTAGE:	480 VOLTS AC, 3-PHASE
RATED ENERGY CAP.:	3,080.4 KWH, PER MEGAPACK UNIT
TOTAL NO. OF UNITS:	(2) MEGAPACK UNITS
TOTAL ENERGY CAP.:	6,160.8 KWH
TOTAL CAP. (AC):	2,831.4 kW-AC
TOTAL CAP. (DC):	2,310.3 kW-DC
NOMINAL FREQUENCY:	60 Hz
INGRESS RATING:	IP66/NEMA 3R - MAIN ENCLOSURE IP20 - THERMAL SYSTEM
REGULATORY:	NRTL LISTED TO UL 1642

MAY FLOWER
ENERGY ENGINEERING. PIONEERED.
485 ST JOHNS PLACE, SUITE 2A
BROOKLYN, NY, 11238
PH: 917.600.0600
WWW.MAYFLOWERPLLC.COM
MAYFLOWER ENERGY ENGINEERING

DOB STAMP & SIGNATURES

NOT FOR CONSTRUCTION

DOB SCAN

ENGINEER SHALL NOT HAVE CONTROL OR CHARGE OF AND SHALL NOT BE RESPONSIBLE FOR CONSTRUCTION MEANS, METHODS, TECHNIQUES, SEQUENCES, OR PROCEDURES, OR FOR SAFETY PRECAUTIONS AND PROGRAMS IN CONNECTION WITH THE WORK, FOR THE ACTS OR OMISSIONS OF THE CONTRACTOR, SUB-CONTRACTORS, OR ANY OTHER PERSONS PERFORMING ANY OF THE WORK, OR FOR THE FAILURE OF ANY OF THEM TO CARRY OUT THE WORK IN ACCORDANCE WITH THE CONTRACT DOCUMENTS.

THIS PLAN IS APPROVED ONLY FOR WORK INDICATED ON THE APPLICATION SPECIFICATION SHEET. ALL OTHER MATTERS SHOWN ARE NOT TO BE RELIED UPON OR TO BE CONSIDERED AS EITHER BEING APPROVED OR IN ACCORDANCE WITH APPLICABLE CODES.

PROJECT NAME:
STAPLES PLAZA SHOPPING CENTER
BATTERY ENERGY STORAGE PROJECT
3333 CROMPOND ROAD
YORKTOWN HEIGHTS, NY
10598

REV	DATE	DESCRIPTION
-	-	-
-	-	-
-	-	-
2	08.26.2022	PER PLANNING BOARD COMMENTS
1	03.21.2022	ISSUED FOR TOWN'S REVIEW

DRAWING TITLE

ELECTRICAL DIAGRAM, BATTERY ENERGY STORAGE SYSTEM

SEAL & SIGNATURE

BERNARDO DORESTE
NYS PROFESSIONAL ENGINEER
LIC. NO. 090960

PROJECT NO: STAPLES PLAZA BESS
FILE: STAPLES PLAZA_BESS PROJECT.DWG
DRAWN BY: BB
CHECKED BY: BB
DRAWING NO.

E-001.00

SHEET 1 OF 1

RECEIVED
PLANNING DEPARTMENT
MAY 11 2022
TOWN OF YORKTOWN

PGR Group

Energy Safety Fire Consultants

PAUL ROGERS (PRINCIPAL)
TELEPHONE: 516-313-7941
EMAIL: PAULROGERS@PGRGROUPLLC.COM

To : IPP Solar

From: Paul Rogers

Subject: Fire Department Training 3/11/2020

This letter is verify that Paul Rogers from PGR Group had conducted a training session on 3/11/2020 for the Yorktown Fire service and their guest. The training consisted of information related to an Energy Storage installation project within the Yorktown fire district area. This was a requirement that needed to be fulfilled for installation approval. If there are any questions about this training please do not hesitate to contact me.

Paul Rogers (President)

Paul J Rogers

Dorchester Glen Subdivision

Site Design Consultants

Civil Engineers • Land Planners

August 30, 2022

RECEIVED
PLANNING DEPARTMENT
AUG 30 2022
TOWN OF YORKTOWN

Mr. Richard Fon, Chairman
Members of the Yorktown Planning Board
1974 Commerce Street – Room 202
Yorktown Heights, NY 10598

Re: Dorchester Glen Subdivision
Town of Yorktown

Dear Chairman Fon and Members of the Planning Board:

Regarding the above captioned, we would like to be placed on the next Planning Board Agenda, for discussion.

With thanks for your continuing courtesy and consideration.

Sincerely,

Joseph C. Riina, P.E.

/cm/sdc 00-16

251-F Underhill Avenue • Yorktown Heights, New York 10598
60 Walnut Grove Road • Ridgefield, Connecticut 06877
(914) 962-4488 (203) 431-9504 Fax (914) 962-7386

Weston & Sampson

Weston & Sampson, PE, LS, LA, ARCHITECTS, PC
1 Winners Circle, Suite 130, Albany, NY 12205
tel: 518-463-4400

MEMORANDUM

RECEIVED
PLANNING DEPARTMENT
AUG 11 2022
TOWN OF YORKTOWN

TO:	Robyn A. Steinberg, AICP, CPESC Town of Yorktown, New York
FROM:	Daniel P. Biggs, RLA, ISA, CERP
DATE:	August 11, 2022
SUBJECT:	**Dorchester Glen Subdivision – Wetland Verification** Town of Yorktown, New York

---

As requested, Daniel Biggs of Weston & Sampson PE, LS, LA, ARCHITECTS, PC (Weston & Sampson) completed a review of the wetland boundary delineated by Anthony Russo of Environmental Compliance Services, Inc. A field visit with Anthony Russo and Sarah Pawliczak (NYSDEC) was conducted on August 9th, 2022, to inspect the wetland boundary flagging. Wetland flagging was in place and easily visible. Flag numbers A1 through A41 were accounted for in the site review and illustrated on the Existing Conditions & Wetland Delineation Plan dated 7/6/22.

As a result, the wetland delineation in the field and on the above referenced maps accurately depicts the limits of the wetlands on the site.

It should be noted that the subdivision plans (Conventional & Flexibility Subdivision Plans) dated 3/30/22 by Site Design Consultants, provided for review do not accurately illustrate the wetland limits and associated 100-ft buffer. As a result, the subdivision plans should be revised to correctly illustrate the wetland limits reviewed and depicted on the Existing Conditions & Wetland Delineation Plan dated 7/6/22.

Please do not hesitate to reach out with any comments or questions regarding our findings and summary of work for this project.

Certification

I certify that all the statements of fact in this appraisal are true, complete, and correct to the best of my knowledge and belief, and that they are made in good faith.

Daniel P. Biggs

Daniel P. Biggs, RLA, ISA (MA-5119A), CERP — *8/11/2022* *Date*

Registered Landscape Architect NY-002443-01 — exp. 1/31/2023

Attachments:

Existing Conditions & Wetland Delineation Plan dated 7/6/22.

0 25 50 100

SCALE: 1"=50'-0"

SAFE DIG
Before You Dig, Drill or Blast!
CALL US TOLL FREE 811 or 1-800-962-7962
NY Industrial Code Rule 753 requires no less than two working days notice, but not more than ten days notice.
www.digsafelynewyork.com

NOTE:
1. *THIS IS NOT A SURVEY.* ALL SURVEY INFORMATION SHOWN ON THIS PLAN HAS BEEN TAKEN FROM SURVEY MAP PREPARED BY NAME OF SURVEYOR, DATED XX/XX/XX, LAST REVISED XX/XX/XX. THE ENGINEER ASSUMES NO RESPONSIBILITY FOR ITS ACCURACY.

NOTE: UNAUTHORIZED ALTERATIONS OR ADDITIONS TO THIS DRAWING IS A VIOLATION OF SECTION 7209 (2) OF THE NEW YORK STATE EDUCATION LAW.

F:\2000\00-16 KINCART MAXWELL\DORCHESTER GLEN\ENGINEERING\CAD\C3D-00-16 DORCHESTER GLEN\DWG\00-16 BASE 12-14-21.DWG 1/16/2017 3:19:52 PM

PROJECT # 15-32

Site Design Consultants
Civil Engineers • Land Planners
251-F Underhill Avenue, Yorktown Heights, NY 10598
(914) 962-4488 - Fax: (914) 962-7386
www.sitedesignconsultants.com

COPYRIGHT © 2012 BY SITE DESIGN CONSULTANTS, ALL RIGHTS RESERVED

Engineer:
Joseph C. Riina, P.E.
NYS Lic. No. 64431

Revisions:

No.	Date	Comments:

SCALE: 1" = 50'
DRAWN BY: CS
DATE: 7/6/22

EXISTING CONDITIONS & WETLAND DELINEATION PLAN

PRELIMINARY SUBDIVISION PLAN
PREPARED FOR
DORCHESTER GLEN
1643 MAXWELL DRIVE
Town of Yorktown
Westchester County

Sheet 1 of 1

Robyn Steinberg

From: Edward Kolisz
Sent: Friday, July 22, 2022 10:28 AM
To: Robyn Steinberg
Subject: RE: Dorchester Glen Subdivision

The next meeting will be in September, we will look at it then. Working on a memo for Dell solar right now.

Edward W. Kolisz
Assistant Building and Fire Inspector, Town of Yorktown, NY
363 Underhill Ave.
Yorktown Heights, NY 10598
Office: 914-962-5722 Ext. 254
Fax: 914-962-1731
www.yorktownny.org

From: Robyn Steinberg <rsteinberg@yorktownny.org>
Sent: Friday, July 22, 2022 10:17 AM
To: Edward Kolisz <edward@yorktownny.org>
Subject: Dorchester Glen Subdivision

Ed,

When is the Fire Board's next meeting? They should review the Dorchester Glen Subdivision at that meeting, right?

Thanks,
Robyn

****
Robyn A. Steinberg, AICP, CPESC
Town of Yorktown Planning Department
Albert A. Capellini Community & Cultural Center
1974 Commerce Street, Room 222
Yorktown Heights, NY 10598
Phone | 914-962-6565
Email | rsteinberg@yorktownny.org
Web | http://www.yorktownny.org/planning

Environmental Protection

Rohit T. Aggarwala
Commissioner

Paul V. Rush, P.E.
Deputy Commissioner

465 Columbus Avenue
Valhalla, NY 10595

Tel. (845) 340-7800
Fax (845) 334-7175
prush@dep.nyc.gov

RECEIVED
PLANNING DEPARTMENT
JUN 28 2022
TOWN OF YORKTOWN

June 28, 2022

Robyn Steinberg, AICP, CPESC
Town of Yorktown
363 Underhill Avenue
Yorktown Heights, New York 10598

Re: **Notice of Intent to be Lead Agency**
Dorchester Glen Subdivision
1643 Maxwell Drive
Town of Yorktown; Westchester County, NY
Tax Map #: 48.08-1-4
DEP Log #: 2022-MU-0373-SQ.1

Dear Ms. Steinberg and Members of the Planning Board:

The New York City Department of Environmental Protection (DEP) has reviewed the Town of Yorktown Planning Board's (Board) Notice of Intent to act as Lead Agency and short Environmental Assessment Form (EAF) for the above referenced project. DEP does not object to the Board acting as Lead Agency for the Coordinated Review of the proposed action pursuant to the New York State Environmental Quality Review Act (SEQRA).

The project site is located in the Muscoot Reservoir drainage basin of New York City's Water Supply. As Muscoot Reservoir is phosphorous restricted, water quality impacts to the receiving reservoirs from pollutant-laden runoff must be avoided or mitigated.

The proposed action is for a four lot single family residential subdivision to be served by municipal water and sewer.

DEP's status as an involved agency stems from its review and approval authority for a Stormwater Pollution Prevention Plan (SWPPP) pursuant to Section 18-39 of the *Rules and Regulations for the Protection from Contamination, Degradation, and Pollution of the New York City Water Supply and Its Sources* (Watershed Regulations).

Based upon review of the circulated documents, DEP respectfully submits the following comments for the Board's consideration:

1. Part 1, question 3.b of the EAF is not answered. The project sponsor should indicate the amount of anticipated soil disturbance on the EAF and show the limits of disturbance on the site plans. In any event, it appears that the action will result in soil disturbance well over 2 acres on slopes of 15% or greater which would require DEP review and approval of a SWPPP in accordance with Section 18-39 (b)(4)(iv) of

the Watershed Regulations.

2. The site plans do not identity the method for post-construction stormwater management. Note that the predominant NRCS soil type on the parcel is identified as Paxton. Paxton soils typically exhibit high seasonal groundwater and erosive conditions that increase with steepness.

3. The "conventional" subdivision plan appears to present less impervious surfaces in comparison to the "flexibility" subdivision plan. The project sponsor is encouraged to provide a comparison of the layout alternatives that addresses the potential impacts to on-site NYS regulated wetland A-22 and surface water features, and demonstrates which alternative better avoids and/or adequately mitigates the identified impacts.

4. Soil testing for the stormwater management practice must be witnessed by DEP. The applicant's representative may contact Mariyam Zachariah at Mzachariah@dep.nyc.gov or 914-749-5357 to make arrangements.

Thank you for the opportunity to provide comments. You may reach the undersigned at cgarcia@dep.nyc.gov or (914) 749-5302 with any questions or if you care to discuss the matter further.

Sincerely,

Cynthia Garcia

Cynthia Garcia, Supervisor
SEQRA Coordination Section

X: J. Petronella, NYSDEC
D. Quast, Yorktown Town Board

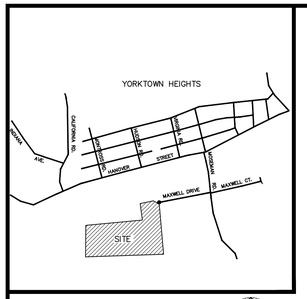

LOCATION MAP
NOT TO SCALE

SITE DATA:

OWNER / DEVELOPER:	JOHN AND ELAINE KINCART 1643 MAXWELL DRIVE YORKTOWN, NY 10598
PROJECT LOCATION:	1643 MAXWELL DRIVE YORKTOWN, NY 10598
EXISTING TOWN ZONING:	R1-20, SINGLE FAMILY RESIDENTIAL
PROPOSED USE:	FLEXIBILITY STANDARDS
TOWN TAX MAP DATA:	SECTION 15.20, BLOCK 3, LOT 6
SITE AREA :	24.3 ACRES (1,058,508 SF)
SEWAGE FACILITIES:	PUBLIC SEWER
WATER FACILITIES:	PUBLIC WATER FACILITIES

ZONING SCHEDULE:

ZONING DISTRICT:	R1-20, ONE FAMILY RESIDENTIAL		
DIMENSIONAL REGULATIONS:	REQUIRED	PROVIDED	VARIANCE REQUIRED
MINIMUM SIZE OF LOT:			
MINIMUM LOT AREA :	20,000 S.F.	> 20,000 S.F.	NONE
MINIMUM LOT WIDTH:	100 FT.	> 100 FT.	NONE
MINIMUM LOT DEPTH:	100 FT.	> 100 FT.	NONE
MINIMUM ROAD FRONTAGE:	100 FT.	> 100 FT.	NONE
MINIMUM USABLE FLOOR AREA:	800 S.F.	> 800 S.F..	NONE
MINIMUM YARD DIMENSIONS:			
PRINCIPAL BUILDING:			
FRONT YARD SETBACK:	40 FT.	> 40 FT.	NONE
SIDE YARD SETBACK:	15 FT.	> 15 FT.	NONE
COMBINED SIDE YARD SETBACK:	40 FT.	> 40 FT.	NONE
REAR YARD SETBACK:	40 FT.	> 40 FT.	NONE
SUPPLEMENTARY YARD DIMENSIONS:			
ACCESSORY BUILDING:			
FRONT YARD SETBACK:	40 FT.	> 40 FT.	NONE
SIDE YARD SETBACK:	15 FT.	> 15 FT.	NONE
COMBINED SIDE YARD SETBACK:	10 FT.	> 10 FT.	NONE
REAR YARD SETBACK:	10 FT.	> 10 FT.	NONE
MAXIMUM HEIGHT:			
PRINCIPAL BUILDING - FEET:	35 FEET	> 35 FEET	NONE
ACCESSORY BUILDING - FEET:	15 FEET	--	NONE
MAXIMUM LOT AREA TO BE OCCUPIED:			
BUILDING COVERAGE:	25%	< 25%	NONE
SUPPLEMENTARY REGULATIONS			
MINIMUM OFF STREET PARKING:	1 SPACE	≥ 1 SPACE	NONE

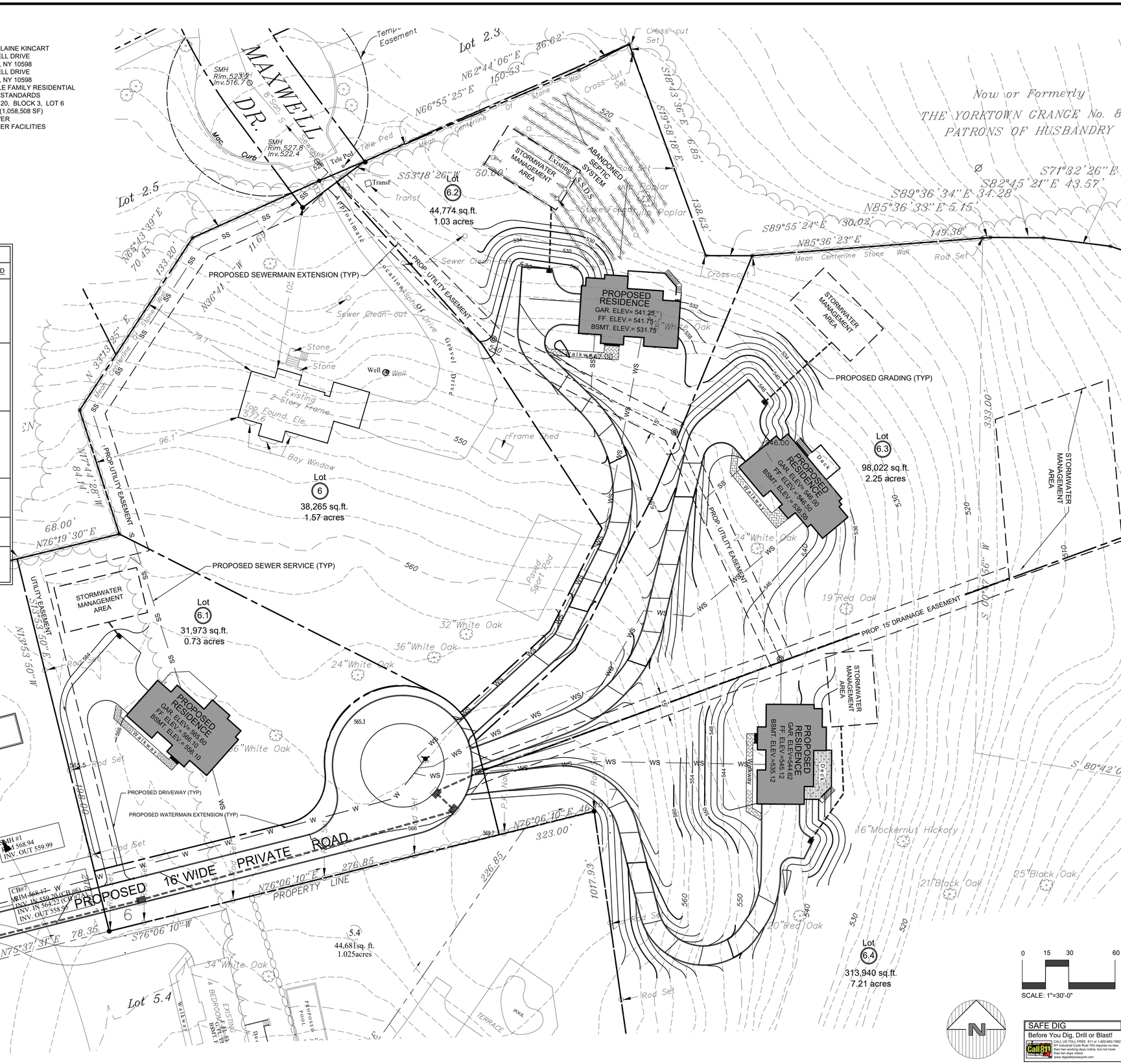

NOTE:
1. THIS IS NOT A SURVEY. ALL SURVEY INFORMATION SHOWN ON THIS PLAN HAS BEEN TAKEN FROM SURVEY MAP PREPARED BY DONALD J. DONNELLY LAND SURVEYOR, P.C., DATED 6/18/1992, LAST REVISED 5/3/2007. THE ENGINEER ASSUMES NO RESPONSIBILITY FOR ITS ACCURACY.

SAFE DIG
Before You Dig, Drill or Blast!
CALL US TOLL-FREE 811 or 1-800-962-7962
NY Industrial Code Rule 753 requires no less than two working days notice, but not more than ten days notice
www.digsafelyneworyork.com

Site Design Consultants
Civil Engineers • Land Planners
251-F Underhill Avenue, Yorktown Heights, NY 10598
(914) 962-4488 - Fax: (914) 962-7386
www.sitedesignconsultants.com

PROJECT # 00-16

COPYRIGHT © 2022 BY SITE DESIGN CONSULTANTS, ALL RIGHTS RESERVED

Engineer: STATE OF NEW YORK JOSEPH CARLO RIINA 079 LICENSED PROFESSIONAL ENGINEER
Joseph C. Riina, P.E.
NYS Lic. No. 64431

Revisions:

No.	Date	Comments:
----	----	----

SCALE: 1" = 30'
DRAWN BY: CS
DATE: 7/6/22

SITE PLAN

PRELIMINARY SUBDIVISION PLAN
PREPARED FOR
DORCHESTER GLEN
1643 MAXWELL DRIVE
Town of Yorktown Westchester County

Sheet 1 of 7

F:\2000\00-16 KINCART MAXWELL\DORCHESTER GLEN\ENGINEERING\CAD\C3D-00-16 DORCHESTER GLEN\DWG\00-16 SITE PLAN 7-5-22.DWG 2/23/2022 11:06:26 AM

NOTE: UNAUTHORIZED ALTERATIONS OR ADDITIONS TO THIS DRAWING IS A VIOLATION OF SECTION 7209 (2) OF THE NEW YORK STATE EDUCATION LAW.

NOTE:
1. THIS IS NOT A SURVEY. ALL SURVEY INFORMATION SHOWN ON THIS PLAN HAS BEEN TAKEN FROM SURVEY MAP PREPARED BY DONALD J. DONNELLY LAND SURVEYOR P.C. ENTITLED "ALTA/ACSM LAND TITLE SURVEY" LAST REVISED 3/3/2001. THE ENGINEER ASSUMES NO RESPONSIBILITY FOR ITS ACCURACY.

NOTE: UNAUTHORIZED ALTERATIONS OR ADDITIONS TO THIS DRAWING IS A VIOLATION OF SECTION 7209 (2) OF THE NEW YORK STATE EDUCATION LAW.

SAFE DIG
Before You Dig, Drill or Blast!
Call 811 Call Before You Dig
Dial 811 or visit www.digalert.org
Dial 811 or visit www.nycon811.com
Dial 811 or visit www.digsafelinc.com

Sheet	PRELIMINARY SUBDIVISION PLAN PREPARED FOR DORCHESTER GLEN 1643 MAXWELL DRIVE Town of Yorktown Westchester County	EXISTING CONDITIONS	SCALE: 1" = 60' DRAWN BY: CS DATE: 7/6/22	Revisions: No. Date Comments: ---- ---- ----	Engineer: STATE OF NEW YORK JOSEPH CARLO RIINA NO. 64431 LICENSED PROFESSIONAL ENGINEER Joseph C. Riina, P.E. NYS Lic. No. 64431	Site Design Consultants Civil Engineers • Land Planners 251-F Underhill Avenue, Yorktown Heights, NY 10598 (914) 962-4488 - Fax: (914) 962-7386 www.sitedesignconsultants.com	PROJECT # 00-16
2 of 7							

COPYRIGHT © 2022 BY SITE DESIGN CONSULTANTS, ALL RIGHTS RESERVED

NOTE:

1. *THIS IS NOT A SURVEY.* ALL SURVEY INFORMATION SHOWN ON THIS PLAN HAS BEEN TAKEN FROM SURVEY MAP PREPARED BY DONALD J. DONNELLY LAND SURVEYOR, P.C., DATED 6/18/1992, LAST REVISED 5/3/2007. THE ENGINEER ASSUMES NO RESPONSIBILITY FOR ITS ACCURACY.

NOTE: UNAUTHORIZED ALTERATIONS OR ADDITIONS TO THIS DRAWING IS A VIOLATION OF SECTION 7209 (2) OF THE NEW YORK STATE EDUCATION LAW.

F:\2000\00-16 KINCART MAXWELL\DORCHESTER GLEN\ENGINEERING\CAD\C3D\00-16 DORCHESTER GLEN.DWG\00-16 SITE PLAN 7-5-22.DWG 2/23/2022 11:06:26 AM

PROJECT # 00-16

Site Design Consultants
Civil Engineers • Land Planners
251-F Underhill Avenue, Yorktown Heights, NY 10598
(914) 962-4488 - Fax: (914) 962-7386
www.sitedesignconsultants.com

COPYRIGHT © 2022 BY SITE DESIGN CONSULTANTS, ALL RIGHTS RESERVED

Engineer:
STATE OF NEW YORK · JOSEPH CARLO RIINA · 075787 · LICENSED PROFESSIONAL ENGINEER
Joseph C. Riina, P.E.
NYS Lic. No. 64431

Revisions:		
No.	Date	Comments:
---	---	---

SCALE: 1" = 30'
DRAWN BY: CS
DATE: 7/6/22

EROSION AND SEDIMENT CONTROL PLAN

PRELIMINARY SUBDIVISION PLAN
PREPARED FOR
DORCHESTER GLEN
1643 MAXWELL DRIVE
Town of Yorktown Westchester County

Sheet 3 of 7

SAFE DIG
Before You Dig, Drill or Blast!
Call 811 Dig Safely New York
CALL US TOLL FREE 811 or 1-800-962-7962
In Industrial Code Rule 753 requires no less than two days notice, but not more than ten days notice.
www.digsafelynewyork.com

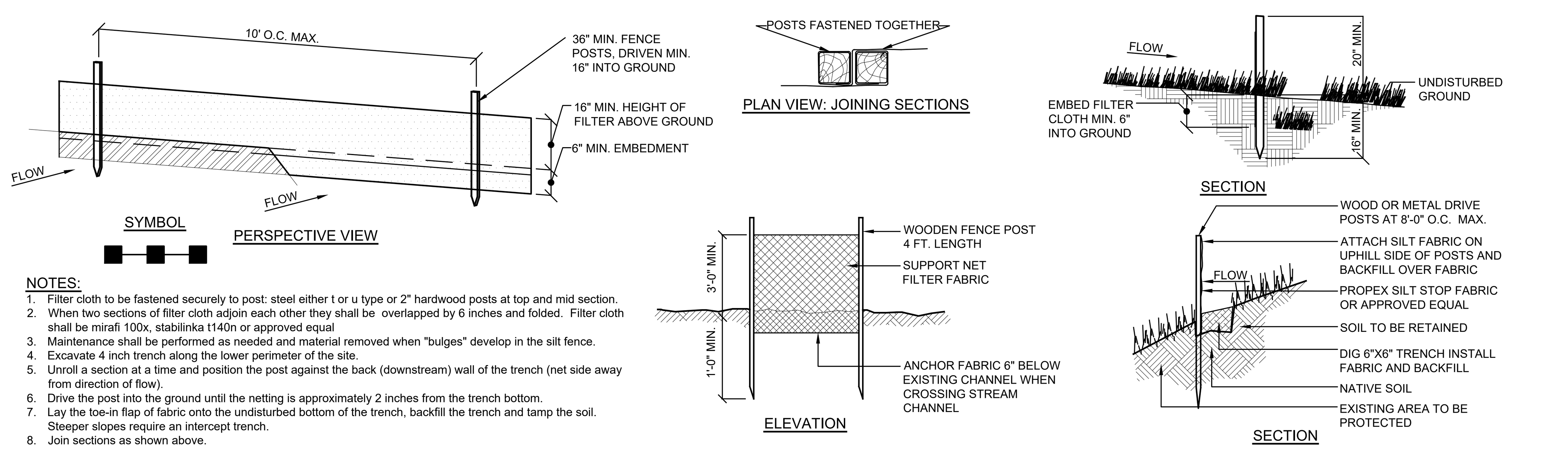

NOTES:
1. Filter cloth to be fastened securely to post: steel either t or u type or 2" hardwood posts at top and mid section.
2. When two sections of filter cloth adjoin each other they shall be overlapped by 6 inches and folded. Filter cloth shall be mirafi 100x, stabilinka t140n or approved equal
3. Maintenance shall be performed as needed and material removed when "bulges" develop in the silt fence.
4. Excavate 4 inch trench along the lower perimeter of the site.
5. Unroll a section at a time and position the post against the back (downstream) wall of the trench (net side away from direction of flow).
6. Drive the post into the ground until the netting is approximately 2 inches from the trench bottom.
7. Lay the toe-in flap of fabric onto the undisturbed bottom of the trench, backfill the trench and tamp the soil. Steeper slopes require an intercept trench.
8. Join sections as shown above.

E-1 SILT FENCE DETAIL
NOT TO SCALE

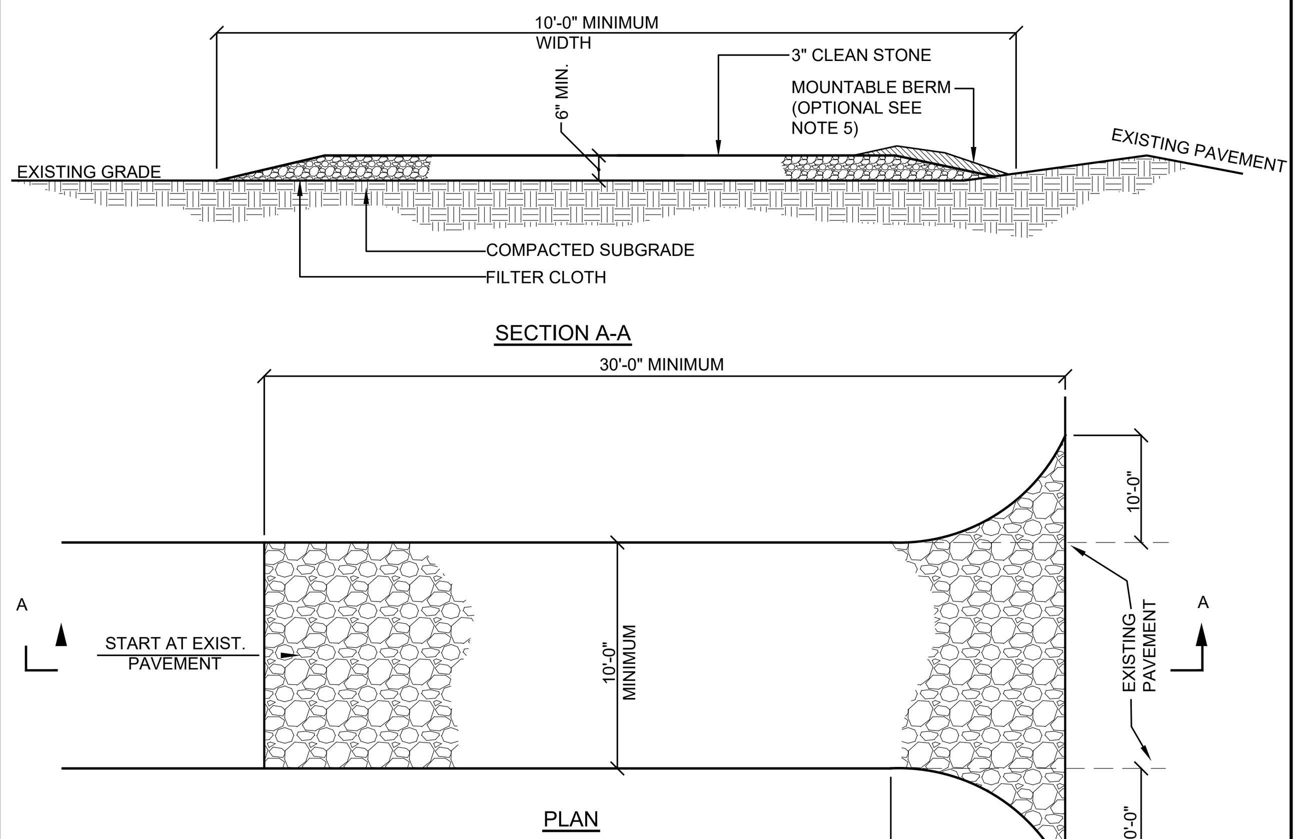

INSTALLATION NOTES:
1. Stone size - use 3" min. Stone, or reclaimed or recycled concrete equivalent.
2. Length - as required, but not less than 50 feet (except on a single residence lot where a 30 foot minimum length would apply.
3. Thickness - not less than six (6) inches.
4. Width - 10 foot minimum, but not less than the full width at points where ingress or egress occur. 24 ft if single entrance to site.
5. Surface water - all surface water flowing or diverted toward construction entrances shall be piped across the entrance. If piping is impractical, a mountable berm with 5:1 slopes will be permitted.
6. Maintenance - the entrance shall be maintained in a condition which will prevent tracking or flowing of sediment onto public right of way this may require periodic top dressing with additional stone as conditions demand and repair and/or cleanouts of any measures used to trap sediment. All sediment spilled, dropped, washed or tracked onto public right of way must be removed immediately.
7. Washing - wheels shall be cleaned to remove sediment prior to entrance onto public right of way. When washing is required, it shall be done on an area stabilized with stone and which drains into an approved sediment trapping device.
8. Periodic inspection and needed maintenance shall be provided after each rain

E-2 STABILIZED CONSTRUCTION ENTRANCE DETAIL
NOT TO SCALE

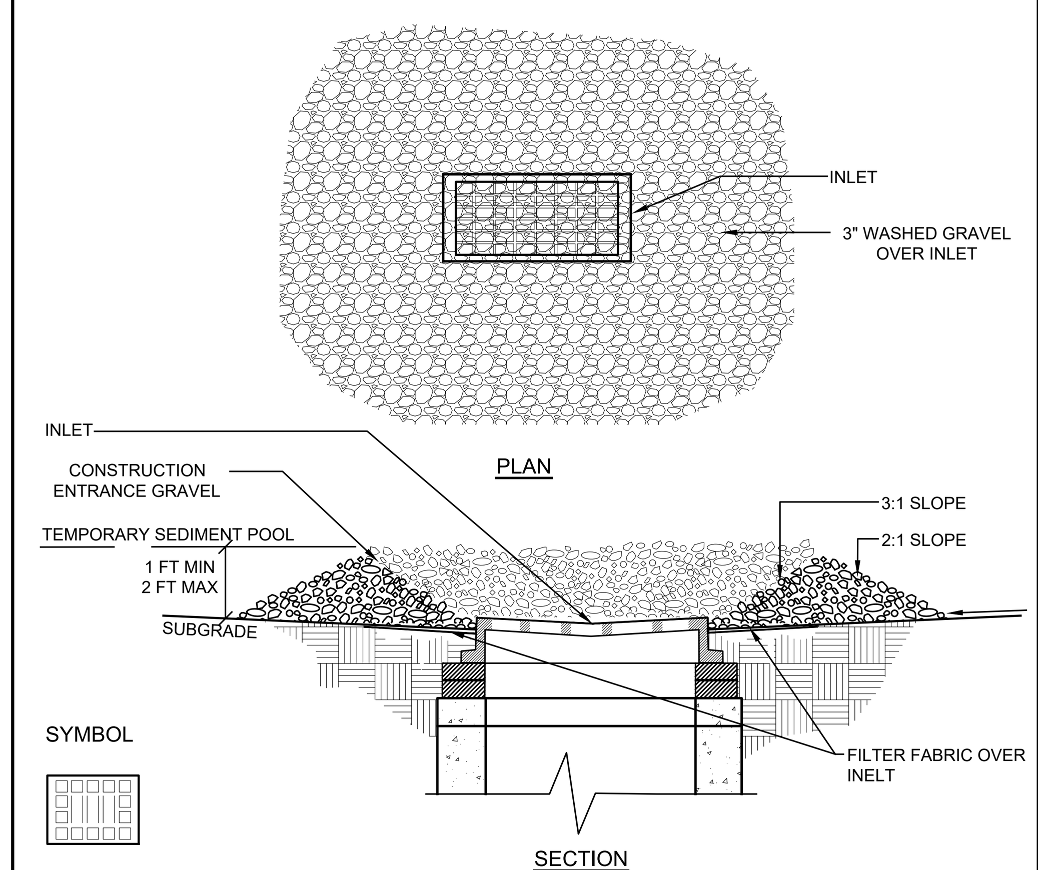

E-4 INLET PROTECTION DETAIL
NOT TO SCALE

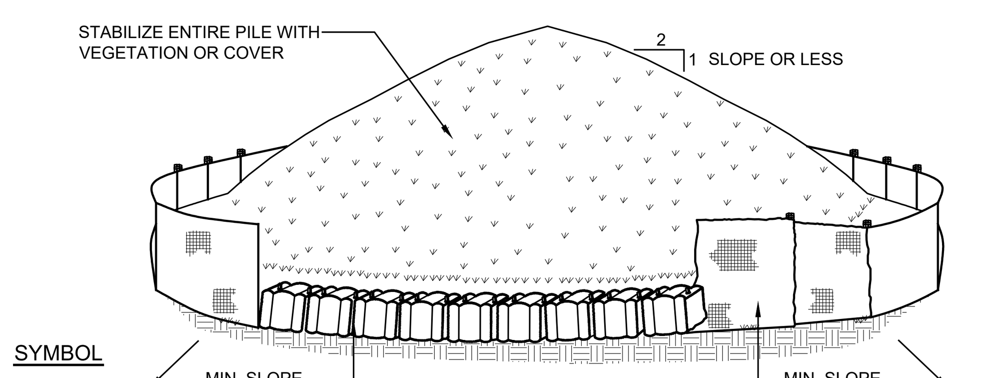

NOTES:
1. Area chosen for stockpiling operations shall be dry and stable.
2. Maximum slope of stockpile shall be 1:2.
3. Upon completion of soil stockpiling, each pile shall be surrounded with either silt fencing or strawbales, then stabilized with vegetation or covered.
4. See detail for installation of silt fence.

E-3 SOIL STOCKPILE DETAIL
NOT TO SCALE

GENERAL EROSION CONTROL NOTES:
1. Contractor shall be responsible for compliance with all sediment and erosion control practices. The sediment and erosion control practices are to be installed prior to any major soil disturbances, and maintained until permanent protection is established. Road surface flows from the site should be dissipated with tracking pad or appropriate measures during adjacent road shoulder regrading. Contractor is responsible for the installation and maintenance of all soil erosion and sedimentation control devices throughout the course of construction.
2. Catch basin inlet protection must be installed and operating at all times until tributary areas have been stabilized. When possible flows should be stabilized before reaching inlet protection structure. Timely maintenance of sediment control structures is the responsibility of the Contractor.
3. All structures shall be maintained in good working order at all times. The sediment level in all sediment traps shall be closely monitored and sediment removed promptly when maximum levels are reached or as ordered by the engineer. All sediment control structures shall be inspected on a regular basis, and after each heavy rain to insure proper operation as designed. An inspection schedule shall be set forth prior to the start of construction.
4. The locations and the installation times of the sediment capturing standards shall be as specified in these plans, as ordered by the Engineer, and in accordance with the latest edition of the "New York Standards and Specifications for Erosion and Sediment Control" (NYSSESC).
5. All topsoil shall be placed in a stabilized stockpile for reuse on the site. All stockpile material required for final grading and stored on site shall be temporarily seeded and mulched within 7 days. Refer to soil stockpile details.
6. Any disturbed areas that will be left exposed more than 7 days and not subject to construction traffic, shall immediately receive temporary seeding. Mulch shall be used if the season prevents the establishment of a temporary cover. Disturbed areas shall not be limed and fertilized prior to temporary seeding.
7. All disturbed areas within 500 feet of an inhabited dwelling shall be wetted as necessary to provide dust control.
8. The contractor shall keep the roadways within the project clear of soil and debris and is responsible for any street cleaning necessary during the course of the project.
9. Sediment and erosion control structures shall be removed and the area stabilized when the drainage area has been properly stabilized by permanent measures.
10. All sediment and erosion control measures shall be installed in accordance with current edition of NYSSESC.
11. All regraded areas must be stabilized appropriately prior to any rock blasting, cutting, and/or filling of soils. Special care should be taken during construction to insure stability during maintenance and integrity of control structures.
12. Any slopes graded at 3:1 or greater shall be stabilized with erosion blankets to be staked into place in accordance with the manufactures requirements. Erosion blankets may also be required at the discretion of Town officials or Project Engineer. When stabilized blanket is utilized for channel stabilization, place all of the volume of seed mix prior to laying net, or as recommended by the manufacturer.
13. To prevent heavy construction equipment and trucks from tracking soil off-site, construct a pervious crushed stone pad. Locate and construct pads as detailed in these plans.
14. Contractor is responsible for controlling dust by sprinkling exposed soil areas periodically with water as required. Contractor to supply all equipment and water.
15. Contractor shall be responsible for construction inspections as per NYSDEC GP-0-15-002 and Town of Yorktown Code.

MAINTENANCE OF TEMPORARY EROSION AND SEDIMENT CONTROL STRUCTURES:
N.Y.S.D.E.C. GP-0-15-002 EXPOSURE RESTRICTIONS - States that any exposed earthwork shall be stabilized in accordance with the guidelines of this plan.
1. Trees and vegetation shall be protected at all times as shown on the detail drawing and as directed by the Engineer.
2. Care should be taken so as not to channel concentrated runoff through the areas of construction activity on the site.
3. Fill and site disturbances should not be created which causes water to pond off site or on adjacent properties.
4. Runoff from land disturbances shall not be discharged or have the potential to discharge off site without first being intercepted by a control structure, such as a sediment trap or silt fence. Sediment shall be removed before exceeding 50% of the retention structure's capacity.
5. For finished grading, adequate grade shall be provided so that water will not pond on lawns for more than 24 hours after rainfall, except in swale flow areas which may drain for as long as 48 hours after rainfall.
6. All swales and other areas of concentrated flow shall be properly stabilized with temporary control measures to prevent erosion and sediment travel. Surface flows over cut and fill areas shall be stabilized at all times.
7. All sites shall be stabilized with erosion control materials within 7 days of final grading.
8. Temporary sediment trapping devices shall be removed from the site within 30 days of final stabilization.

MAINTENANCE SCHEDULE:

	DAILY	WEEKLY	MONTHLY	AFTER RAINFALL	NECESSARY TO MAINTAIN FUNCTION	AFTER APPROVAL OF INSPECTOR
SILT FENCE	— — —	INSP.	INSP.	INSP.	CLEAN/ REPLACE	REMOVE
INLET PROTECTION	— — —	INSP.	INSP.	CLEAN	REPLACE	REMOVE

MAINTENANCE OF PERMANENT CONTROL STRUCTURES DURING CONSTRUCTION:
The stormwater management system and outlet structure shall be inspected on a regular basis and after every rainfall event. Sediment build up shall be removed from the inlet protection regularly to insure detention capacity and proper drainage. Outlet structure shall be free of obstructions. All piping and drain inlets shall be free of obstruction. Any sediment build up shall be removed.

MAINTENANCE OF CONTROLS AFTER CONSTRUCTION:
Controls (including respective outlet structures) should be inspected periodically for the first few months after construction and on an annual basis thereafter. They should also be inspected after major storm events.

DEBRIS AND LITTER REMOVAL:
Twice a year, inspect outlet structure and drain inlets for accumulated debris. Also, remove any accumulations during each mowing operation.

STRUCTURAL REPAIR/REPLACEMENT:
Outlet structure must be inspected twice a year for evidence of structural damage and repaired immediately.

EROSION CONTROL:
Unstable areas tributary to the basin shall immediately be stabilized with vegetation or other appropriate erosion control measures.

SEDIMENT REMOVAL:
Sediment should be removed after it has reached a maximum depth of five inches above the stormwater management system floor.

CONSTRUCTION SEQUENCE:

Refer to the Plan Set for all plans and details which relate to Construction Sequence.

1. Prior to the beginning of any site work the major features of the construction must be field staked by a licensed surveyor. These include the building, limits of disturbance, utility lines, and stormwater practices.
2. Prior to the start of the project, an on-site pre-construction meeting will be held. this will be attended by the project owner, the operator responsible for complying with the approved construction drawings including the erosion and sediment control (E&SC) plan and details, the design engineer, the engineer responsible for E&SC monitoring during construction, and town representatives from the engineering department and code enforcement.
3. A licensed surveyor must define infrastructure locations, limits of disturbance, stormwater basin limits, and grades in the field prior to start of any construction. Limits of disturbance shall be marked with the installation of construction fence or approved equal. The extents of the stormwater management system shall be cordoned off to minimize the disturbance on this area.
4. Install all perimeter erosion control measures, construction entrance as shown on the Erosion and Sediment Control Plan and the associated Details. Install silt fencing at the bottom of slopes. The standards established in Part 1.B 1.b of the GP-015-002 included in appendix B of this SWPPP must be adhered to.
5. Strip site, clear vegetation, and place topsoil in stockpile locations shown on the plan.
6. Begin rough grading the site. Contractor to limit exposure of denuded soils by providing temporary stabilization for work areas that will remain undisturbed for over seven (7) days. Chipped rock that is not suitable to remain on site shall be hauled away and properly disposed of. An area has been provided for the stockpiling of removed soil and rock which is to be removed from the site.
7. Rough grade building and driveway.
8. Begin construction of building.
9. Begin the excavation and installation of the drainage and stormwater management system. Protect trenches and open excavations from erosion. Entry into the system shall be blocked off until site has reached final stabilization. Once system has been installed, backfill, seed where necessary, and reinstall measures to cordon off the system from disturbance.
10. During site construction maintain and re-establish as required erosion control and stabilization measures as required by the site plan and details.
11. Excavate to the sub-grade level. Scarify the existing soil to a depth of 12-inches by rototilling or other means acceptable to the Engineer. Install all courses of stone as per the specifications given on the Plan.
12. Install base course of Item 4 in all pavement areas. Stabilize all open areas with seed and mulch.
13. Construct remainder of building, driveway and parking areas. First install curbs, asphalt binder, and concrete sidewalk. Once binder course is installed, drainage outlet may be unblocked.
14. Backfill curbs, grade, place final soil topping and put in place permanent vegetative cover over all disturbed areas, landscape beds, slopes, etc.
15. Once site stabilization has taken place (An area shall be considered to have achieved final stabilization when it has a minimum uniform 80% perennial vegetative cover or other permanent non-vegetative cover with a density sufficient to resist accelerated surface erosion and subsurface characteristics sufficient to resist sliding and other movements), remove all temporary erosion and sediment controls, unplug the drainage system to allow runoff to enter the stormwater management system.

Winter Stabilization Notes:

If construction activities are expected to extend into or occur during the winter season the contractor shall anticipate proper stabilization and sequencing. Construction shall be sequenced such that wherever possible areas of disturbance that can be completed and permanently stabilized shall be done by applying and establishing permanent vegetative cover before the first frost. Areas subject to temporary disturbance that will not be worked for an extended period of time shall be treated with temporary seed, mulch, and/or erosion blankets.

TOPSOIL:
Existing topsoil will be removed and stored in piles sufficiently as to avoid mixing with other excavation. Stockpiles shall be surrounded by erosion control as outlined on these plans. The furnishing of new topsoil shall be of a better or equal to the following criteria (SS713.01 NYSDOT):
1. The pH of the material shall be 5.5 to 7.6.
2. The organic content shall not be less than 2% or more than 70%.
3. Gradation:

SIEVE SIZE	% PASSING BY WGT.
2 INCH	100
1 INCH	85 TO 100
1/4 INCH	65 TO 100
NO. 200 MESH	20 TO 80

PERMANENT VEGETATIVE COVER:
1. Site preparation:
   - 1.1. Install erosion control measures.
   - 1.2. Scarify compacted soil areas.
   - 1.3. Lime as required to ph 6.5.
   - 1.4. Fertilize with 10-6-4 4 lbs/1,000 S.F.
   - 1.5. Incorporate amendments into soil with disc harrow.
2. Seed mixtures for use on swales and cut and fill areas.

MIXTURE		LBS./ACRE
ALT. A	KENTUCKY BLUE GRASS	20
	CREEPING RED FESCUE	28
	RYE GRASS OR REDTOP	5
ALT. B	CREEPING RED FESCUE	20
	REDTOP	2
	TALL FESCUE/SMOOTH BLOOMGRASS	20

3. SEEDING
   - 3.1. Prepare seed bed by raking to remove stones, twigs, roots and other foreign material.
   - 3.2. Apply soil amendments and integrate into soil.
   - 3.3. Apply seed uniformly by cyclone seeder culti-packer or hydro-seeder at rate indicated.
   - 3.4. Stabilize seeded areas in drainage swales.
   - 3.5. Irrigate to fully saturate soil layer, but not to dislodge planting soil.
   - 3.6. Seed between April 1st and May 15th or August 15th and October 15th.
   - 3.7. Seeding may occur May 15th and August 15th if adequate irrigation is provided.

TEMPORARY VEGETATIVE COVER:
SITE PREPARATION:
1. Install erosion control measures.
2. Scarify areas of compacted soil.
3. Fertilize with 10-10-10 at 400/acre.
4. Lime as required to ph 6.5.

SEED SPECIES:

MIXTURE	LBS./ACRE
Rapidly germinating annual ryegrass (or approved equal)	20
Perennial ryegrass	20
Cereal oats	36

SEEDING:
Same as permanent vegetative cover

CONTRACTOR CERTIFICATION STATEMENT

Certification Statement - All contractors and subcontractors as identified in a SWPPP, by the Owner or Operator, in accordance with Part III.A.5 of the SPDES General Permit for Stormwater Runoff from Construction Activity, GP-0-15-002, dated January 29, 2015, Page 10 of 40, shall sign a copy of the following Certification Statement before undertaking any construction activity at the Site identified in the SWPPP:

"I hereby certify that I understand and agree to comply with the terms and conditions of the SWPPP and agree to implement any corrective actions identified by the Qualified Inspector during a site inspection. I also understand that the Owner or Operator must comply with the terms and conditions of the New York State Pollutant Discharge Elimination System ("SPDES") General Permit for Stormwater Discharge from Construction Activities and that it is unlawful for any person to cause or contribute to a violation of water quality standards. Furthermore, I understand that certifying false, incorrect or inaccurate information is a violation of the referenced permit and the laws of the State of New York and could subject me to criminal, civil and/or administrative proceedings."

Individual Contractor: ____________________
Name and Title (please print): ____________________
Signature of Contractor: ____________________
Company / Contracting Firm: ____________________
Name of Company: ____________________
Address of Company: ____________________
Telephone Number / Cell Number: ____________________
Site Information: ____________________
Address of Site: ____________________
____
Today's Date: ____________________

OWNER / OPERATOR CERTIFICATION
"I certify under penalty of law that this document and all attachments were prepared under my direction or supervision in accordance with a system designed to assure that qualified personnel properly gathered and evaluated the information submitted. Based on my inquiry of the person or persons who manage the system or those persons directly responsible for gathering the information, the information submitted is, to the best of my knowledge and belief, true, accurate, and complete. Further, I hereby certify that the SWPPP meets all Federal, State, and local erosion and sediment control requirements. I am aware that false statements made herein are punishable as a Class A misdemeanor pursuant to Section 210.45 of the Penal Law."

Name (please print): ____________________
Title: ____________________
Date: ____________________
Address: ____________________
Phone: ____________________
Signature: ____________________
E-mail: ____________________

PROJECT # 00-16

Site Design Consultants
Civil Engineers • Land Planners
251-F Underhill Avenue, Yorktown Heights, NY 10598
(914) 962-4488 - Fax: (914) 962-7386
www.sitedesignconsultants.com

Engineer: STATE OF NEW YORK · JOSEPH CARLO RIINA · No. 64431 · LICENSED PROFESSIONAL ENGINEER
Joseph C. Riina, P.E.
NYS Lic. No. 64431

COPYRIGHT © 2022 BY SITE DESIGN CONSULTANTS, ALL RIGHTS RESERVED

Revisions: No.	Date	Comments:
----	----	----

SCALE: N.T.S. | DRAWN BY: CS | DATE: 7/6/22

EROSION DETAILS

PRELIMINARY SUBDIVISION PLAN
PREPARED FOR
DORCHESTER GLEN
1643 MAXWELL DRIVE
Town of Yorktown Westchester County

Sheet 4 of 7

F:\2000\00-16 KINCART MAXWELL\DORCHESTER GLEN\ENGINEERING\CAD\C3D-00-16 DORCHESTER GLEN\DWG\00-16 SITE PLAN 7-5-22.DWG 2/23/2022 11:06:26 AM

NOTE: UNAUTHORIZED ALTERATIONS OR ADDITIONS TO THIS DRAWING IS A VIOLATION OF SECTION 7209 (2) OF THE NEW YORK STATE EDUCATION LAW.

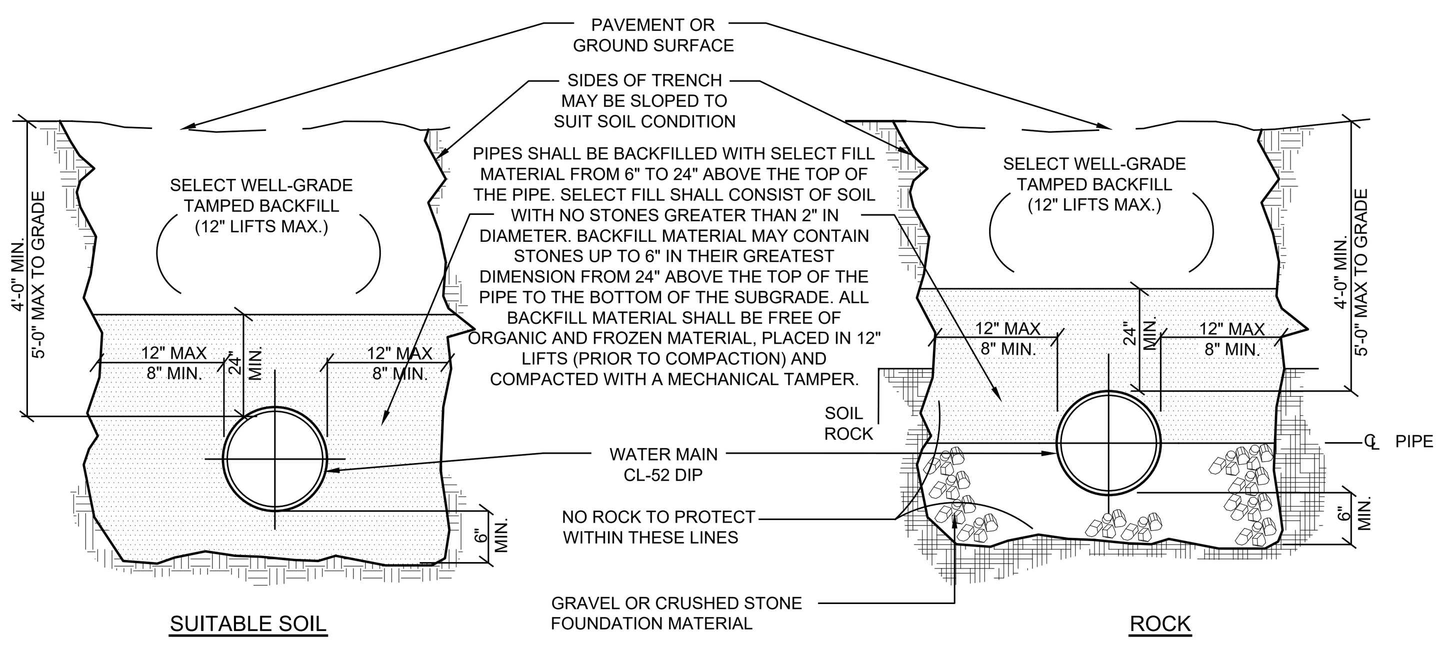

NOTES:
1. In materials to be considered as unsuitable (i.e. Muck) material is to be replaced 24" below the pipe invert and replaced with item no. 4 bedding.
2. A continuous and uniform bedding shall be provided in the trench for all buried pipe. Backfill material shall be tamped in layers around the pipe and to a sufficient height above the pipe to adequately support and protect the pipe. Stones found in the trench shall be removed for a depth of at least six inches below the bottom of the pipe.
3. See Pavement Replacement Detail for backfill specifications in local and main TOWN roads.

W-1 WATER MAIN BEDDING DETAIL

NOT TO SCALE

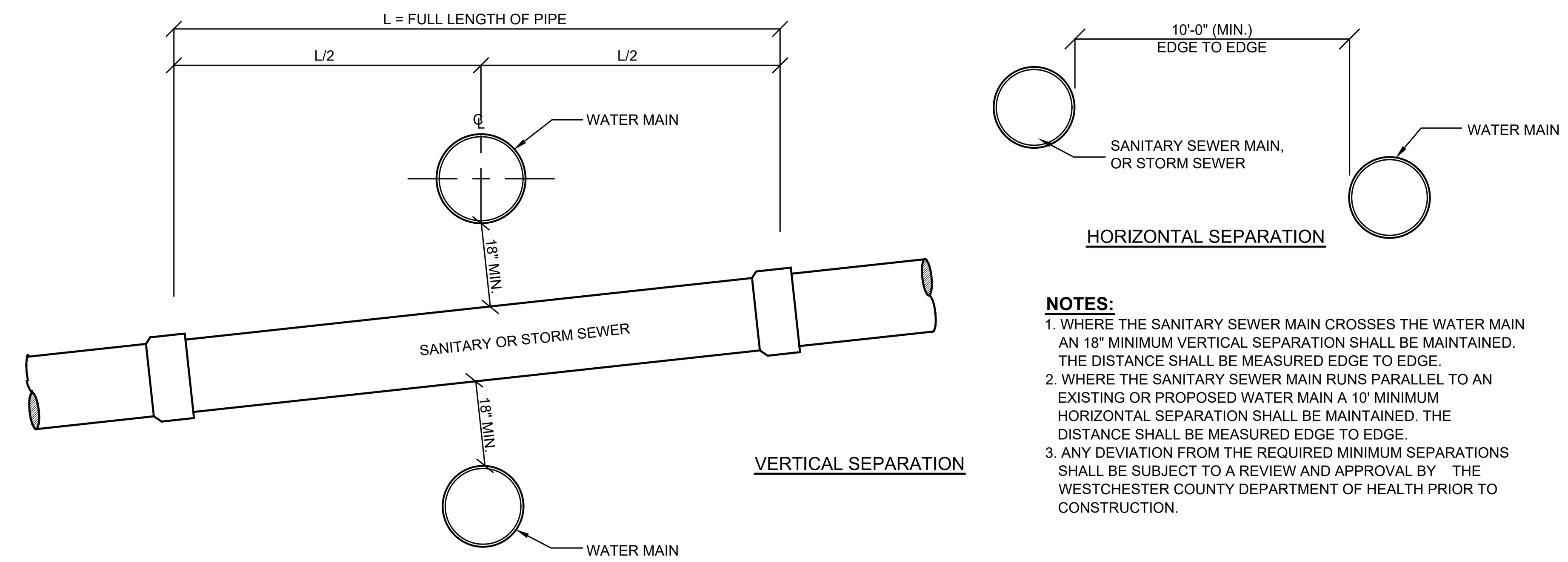

NOTES:
1. WHERE THE SANITARY SEWER MAIN CROSSES THE WATER MAIN AN 18" MINIMUM VERTICAL SEPARATION SHALL BE MAINTAINED. THE DISTANCE SHALL BE MEASURED EDGE TO EDGE.
2. WHERE THE SANITARY SEWER MAIN RUNS PARALLEL TO AN EXISTING OR PROPOSED WATER MAIN A 10' MINIMUM HORIZONTAL SEPARATION SHALL BE MAINTAINED. THE DISTANCE SHALL BE MEASURED EDGE TO EDGE.
3. ANY DEVIATION FROM THE REQUIRED MINIMUM SEPARATIONS SHALL BE SUBJECT TO A REVIEW AND APPROVAL BY THE WESTCHESTER COUNTY DEPARTMENT OF HEALTH PRIOR TO CONSTRUCTION.

W-4 SEPARATION OF WATER MAINS, SANITARY SEWERS OR STORM SEWERS

NOT TO SCALE

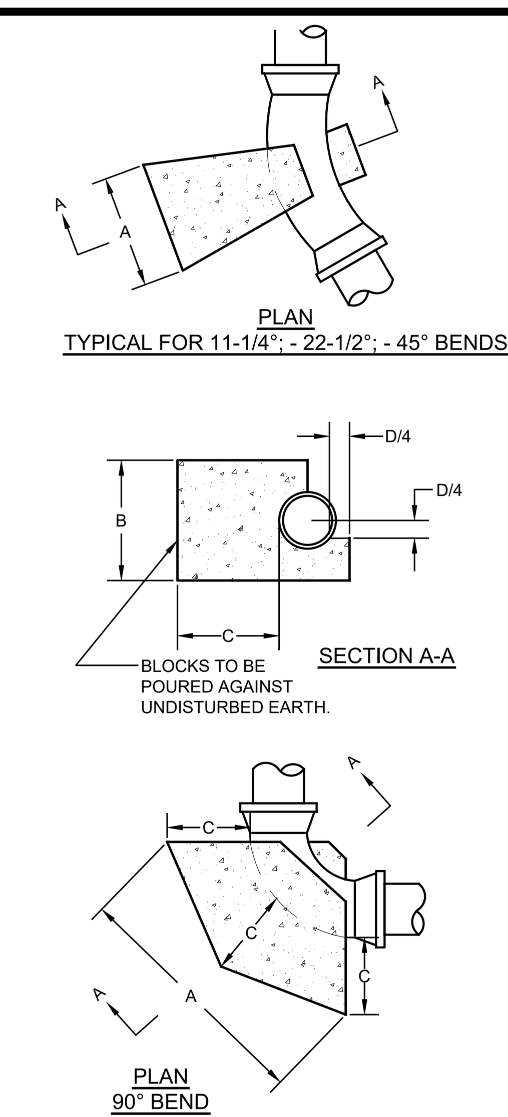

PIPE DIAM. IN.	BEND	BLOCK DIMENSIONS			CONCRETE VOLUME FT.³
		A IN.	B IN.	C IN.	
16	90	80	32	32	39.5
	45	48	28	30	19.7
	22.5	30	22	26	10.0
	11.25	20	18	12	3.8
12	90	56	26	20	15.0
	45	38	22	10	7.7
	22.5	20	20	12	3.6
	11.25	18	18	12	3.0
10	90	48	22	16	8.9
	45	28	20	12	4.0
	22.5	18	18	12	2.7
	11.25	16	16	12	2.2
8	90	34	20	12	4.4
	45	20	18	12	2.5
	22.5	14	14	12	1.6
	11.25				(3)
6	90	24	16	12	2.5
	45	14	14	12	1.5
	22.5	12	12	12	1.2
	11.25				(3)

NOTES:
1. Min. 2,500 psi concrete to be used.
2. Block dimensions are minimum and are based upon soil bearing pressure of 2,000 psf and water pressure of 150 psi. Where soil bearing is less or water pressure is greater, a special design will be required.
3. All bolts shall be covered with burlap before pouring concrete.
4. Bend to be set against disturbed earth, backfill to be firmly tamped, or block to be furnished as directed by the engineer.

W-8 THRUST BLOCKING FOR HORIZONTAL BENDS

NOT TO SCALE

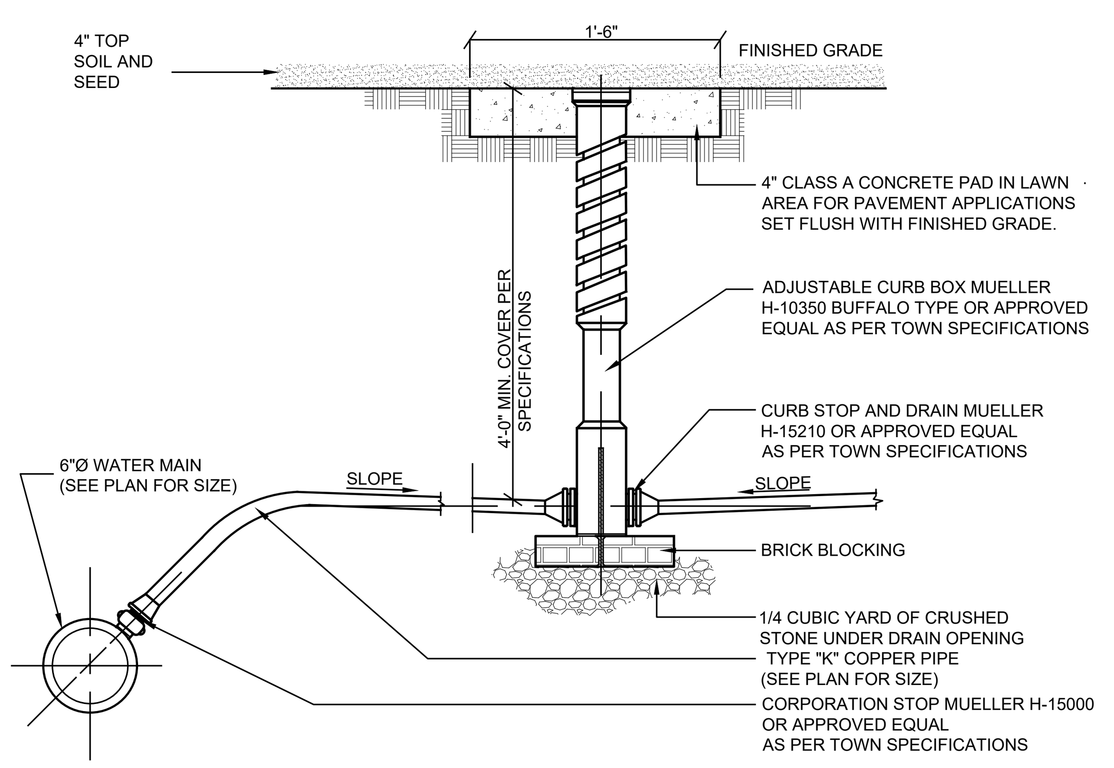

W-2 WATER SERVICE CONNECTION DETAIL

NOT TO SCALE

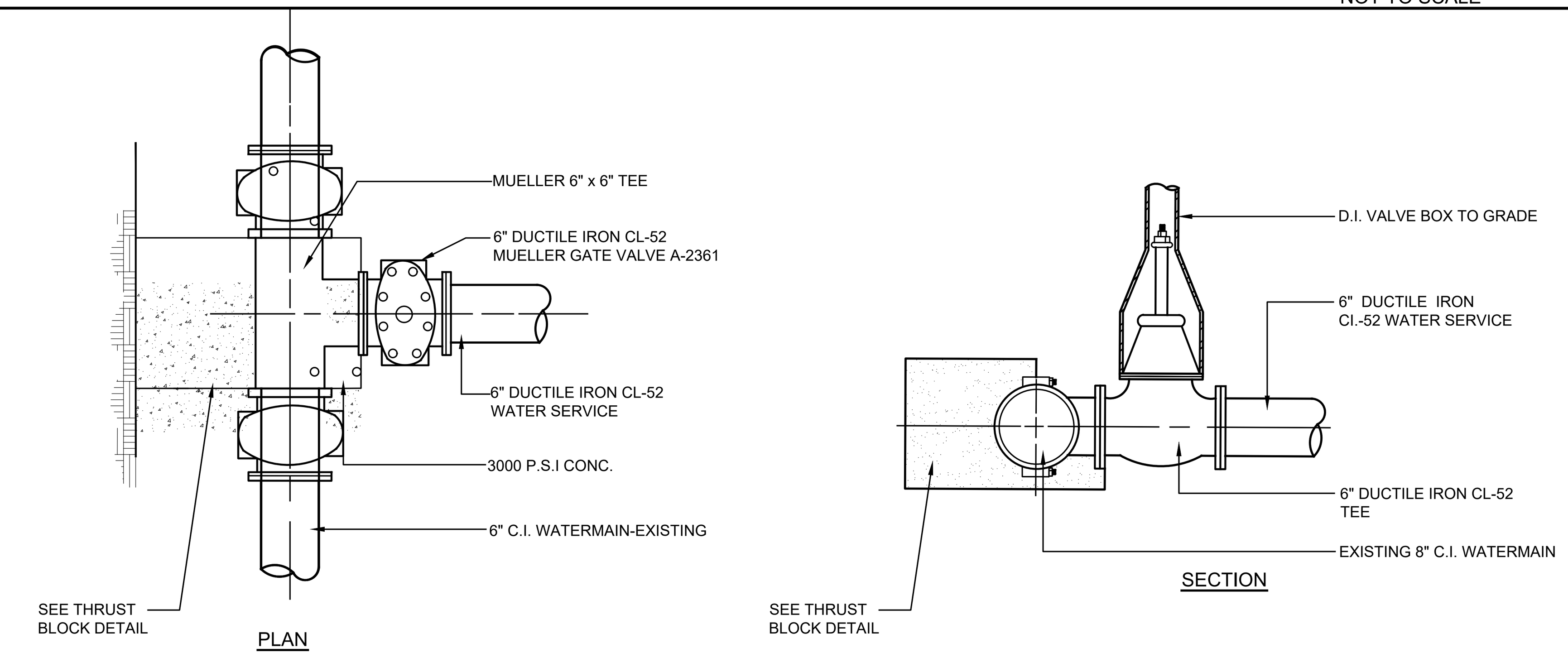

W-5 TEE AND GATE VALVE CONNECTION DETAIL

NOT TO SCALE

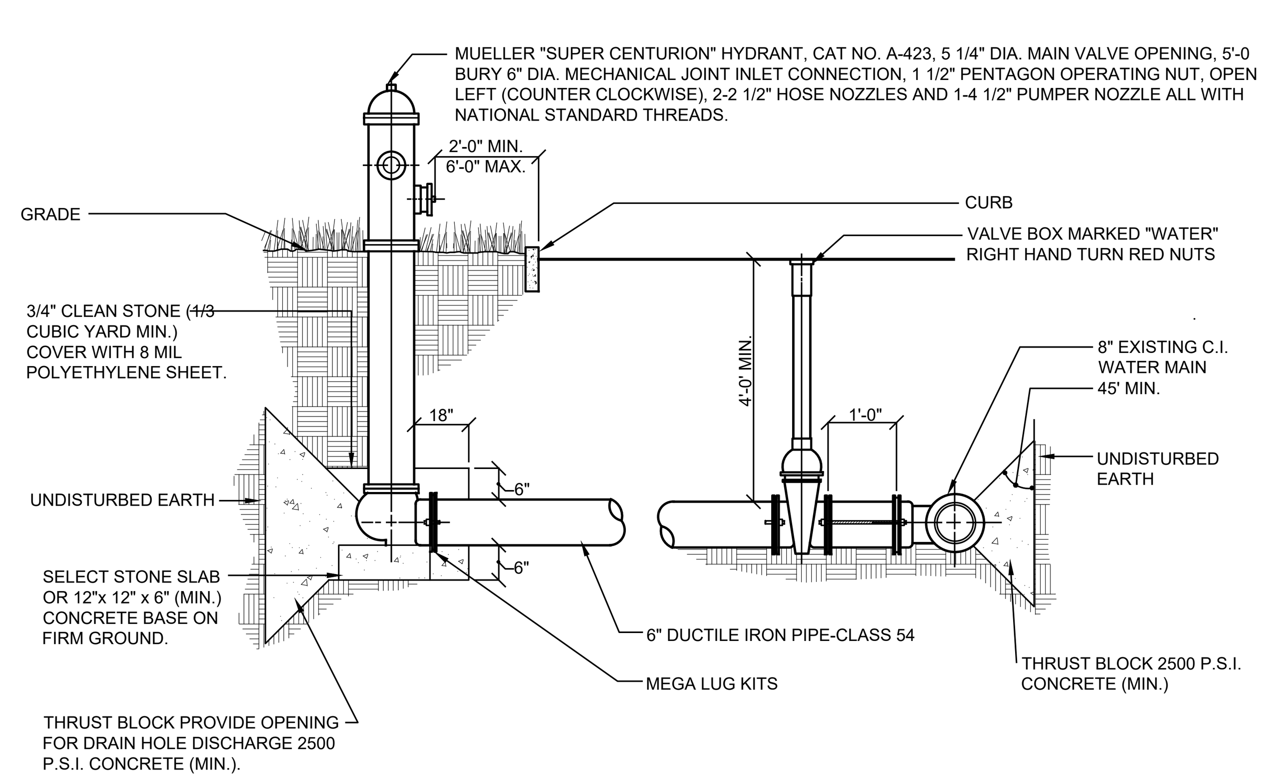

NOTES:
1. Retainer glands, concrete thrust blocks and tie rods shall be used at all locations where restraints are required.
2. If groundwater is encountered within 7 feet of grade, hydrant drain holes shall be plugged. When the drains are plugged the barrels must be pumped dry after use during freezing weather. Where hydrant drains are not plugged, a gravel pocket or dry well shall be provided unless the natural soils will provide adequate drainage. Hydrant drains shall not be connected to or located within 10 feet of sanitary sewers or storm drains.
3. If hydrant is within 10 feet of sewers, hydrant drain holes shall be plugged.
4. Hydrant shall be painted with two coats of Electro- Farrothane, plastic finish, No. 44 red paint.
5. All gate valves shall be Mueller AWWA standard.

W-3 FIRE HYDRANT DETAIL

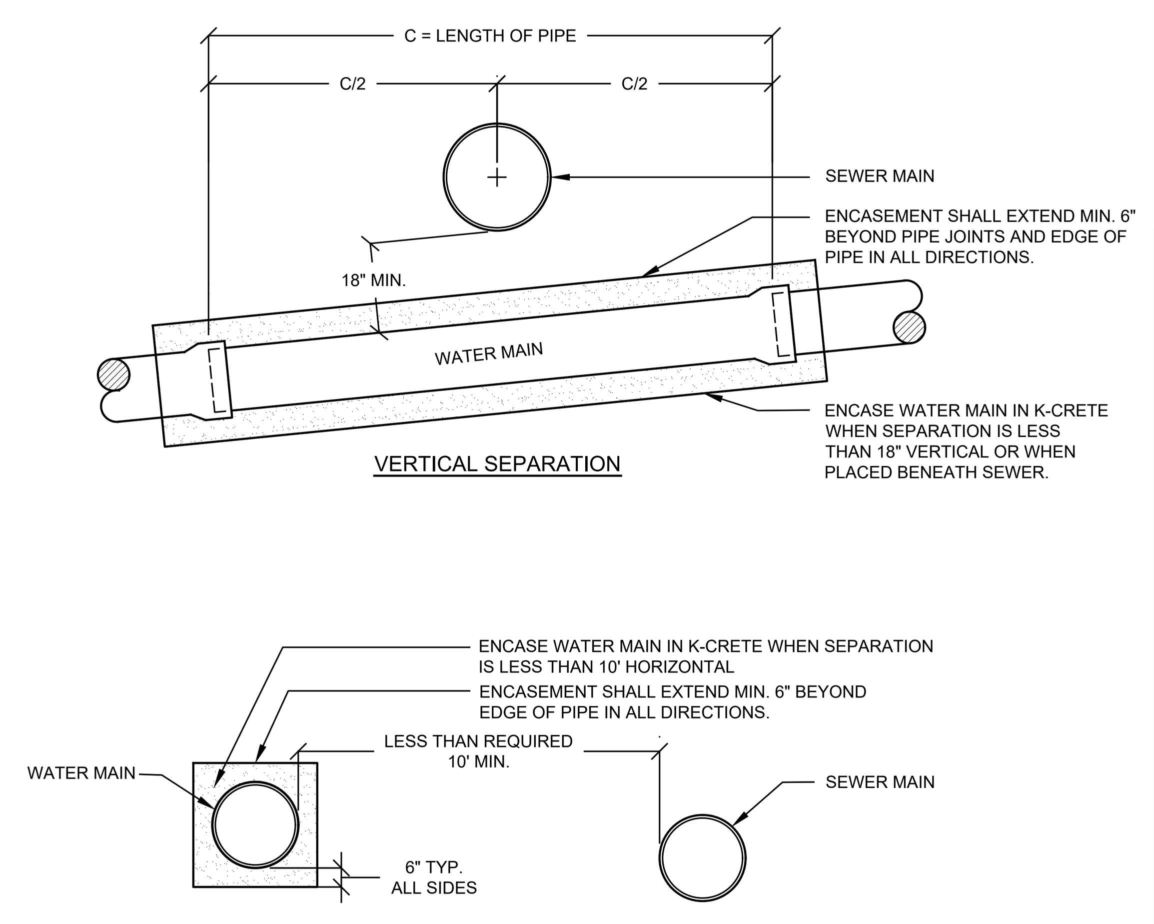

NOTES:
1. In the event that there is a deviation from any of the separation requirements, said changes or use of encasement must be approved by the Westchester County Department of Health.
2. Encasement of the water main shall apply only at locations where the minimum required separation distances can not be maintained or whenever a water main crosses beneath a sewer main.
3. Encasement of the water main shall be limited to those locations indicated on the plans.
4. Encasement shall be completed with k-crete having a minimum compressive strength of 50 psi.
5. One full length of sewer pipe shall be laid so both joints will be as far from the water main as possible.
6. Where the sewer has already been installed, the water main shall be placed so that the joints on the water main are equidistant from the sewer. No water pipe shall pass through or come in contact with any sewer manhole.

W-6 WATER MAIN ENCASEMENT DETAIL

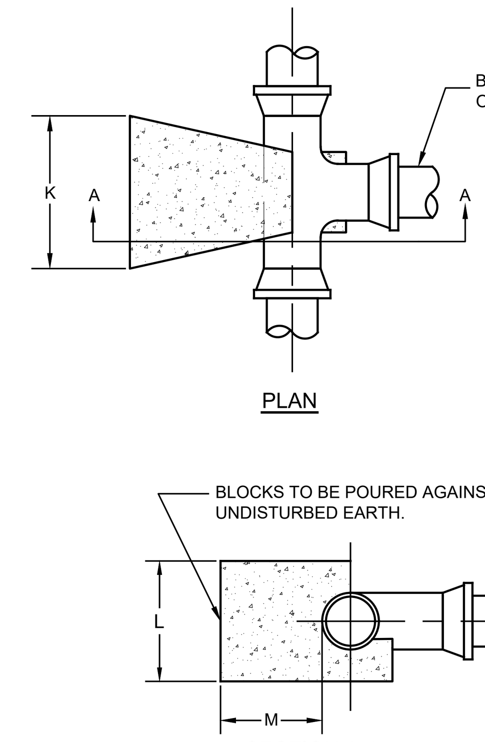

BRANCH SIZE IN.	BLOCK DIMENSIONS			CONCRETE VOLUME FT.³
	K IN.	L IN.	M IN.	
6	18	16	12	2.4
8	30	18	12	4.0
10	42	20	12	6.3
12	50	24	16	11.3
16	60	36	24	30.0

NOTES:
1. Min. 2,500 psi concrete to be used.
2. Block dimensions are minimum and are based upon soil bearing pressure of 2,000 psf and water pressure of 150 psi. Where soil bearing is less or water pressure is greater, a special design will be required.
3. All bolts shall be covered with burlap before pouring concrete.

W-7 THRUST BLOCKING FOR TEES

Site Design Consultants

Civil Engineers • Land Planners
251-F Underhill Avenue, Yorktown Heights, NY 10598
(914) 962-4488 - Fax: (914) 962-7386
www.sitedesignconsultants.com

PROJECT # 00-16

COPYRIGHT © 2022 BY SITE DESIGN CONSULTANTS, ALL RIGHTS RESERVED

Engineer:
STATE OF NEW YORK · JOSEPH CARLO RIINA · LICENSED PROFESSIONAL ENGINEER · NO. 64431
Joseph C. Riina, P.E.
NYS Lic. No. 64431

Revisions:		
No.	Date	Comments:
----	----	----

SCALE: N.T.S.
DRAWN BY: CS
DATE: 7/6/22

WATER MAIN DETAILS

PRELIMINARY SUBDIVISION PLAN
PREPARED FOR
DORCHESTER GLEN
1643 MAXWELL DRIVE
Town of Yorktown Westchester County

F:\2000\00-16 KINCART MAXWELL\DORCHESTER GLEN\ENGINEERING\CAD\C3D-00-16 DORCHESTER GLEN\DWG\00-16 SITE PLAN 7-5-22.DWG 2/23/2022 11:06:26 AM

NOTE: UNAUTHORIZED ALTERATIONS OR ADDITIONS TO THIS DRAWING IS A VIOLATION OF SECTION 7209 (2) OF THE NEW YORK STATE EDUCATION LAW.

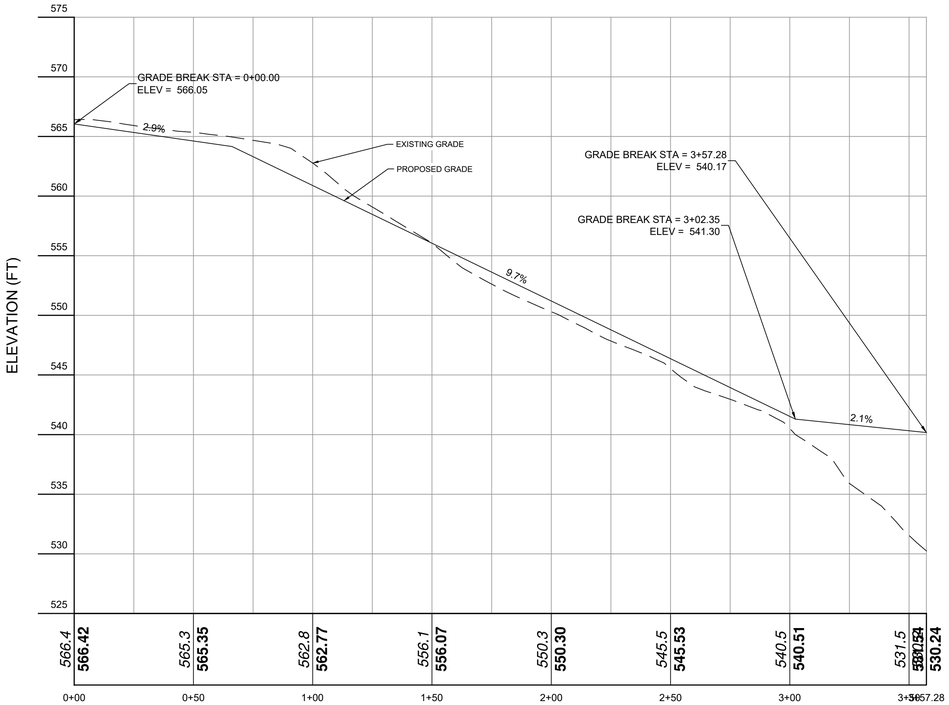

Lot 6.2
VERT. SCALE: 1" = 10
HORIZ. SCALE: 1" = 50

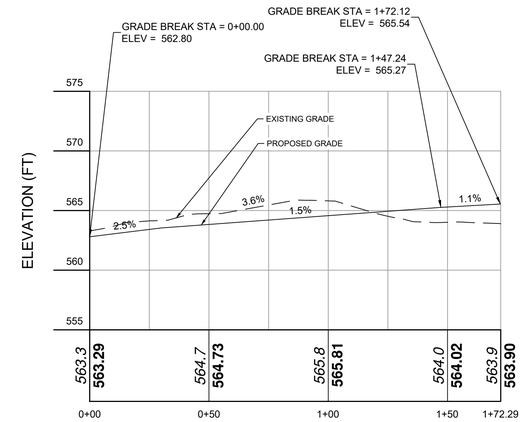

PROPOSED DRIVEWAY - LOT 6.1
VERT. SCALE: 1" = 10
HORIZ. SCALE: 1" = 50

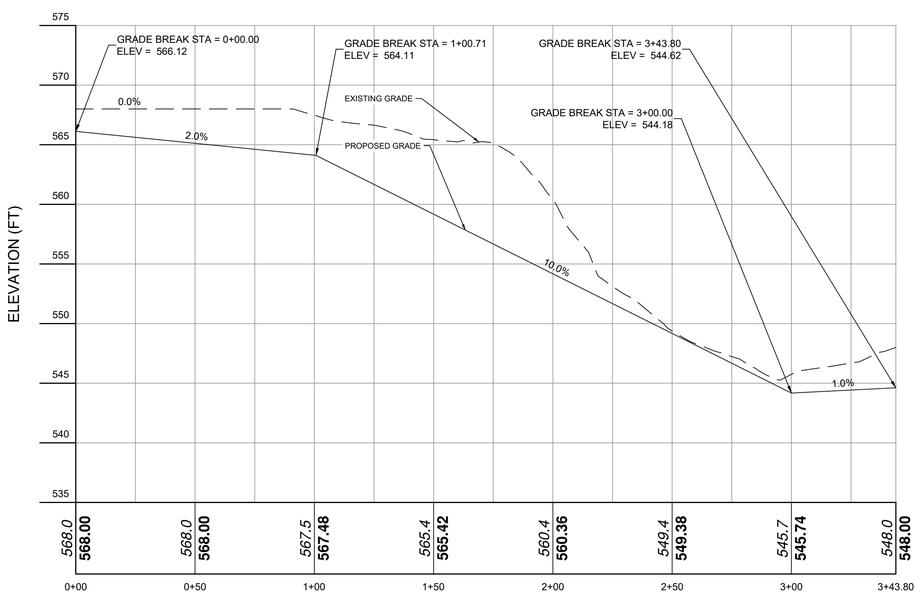

PROPOSED DRIVEWAY - LOT 6.4
VERT. SCALE: 1" = 10
HORIZ. SCALE: 1" = 50

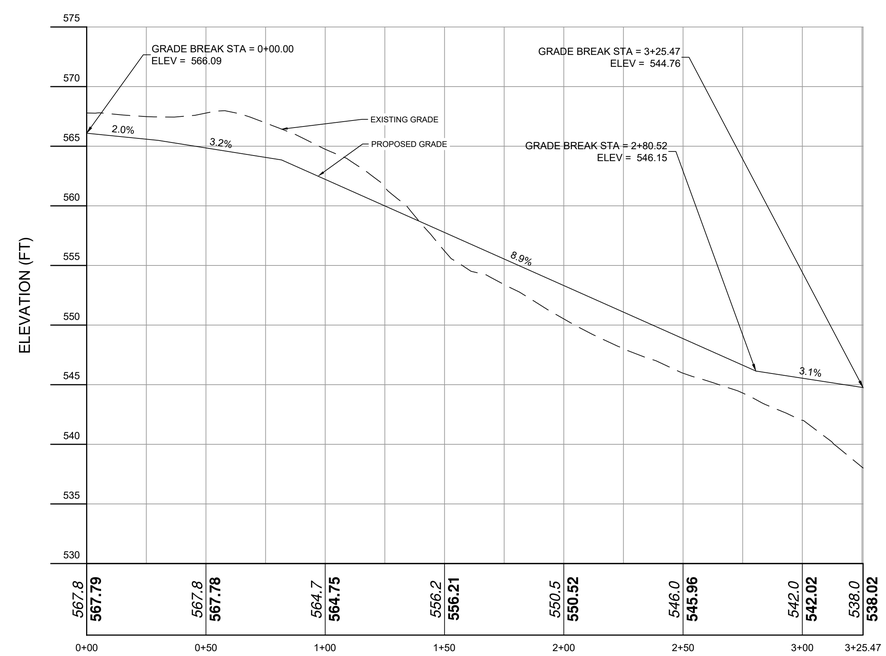

Lot 6.3
VERT. SCALE: 1" = 10
HORIZ. SCALE: 1" = 50

F:\2000\00-16 KINCART MAXWELL\DORCHESTER GLEN\ENGINEERING\CAD\C3D-00-16 DORCHESTER GLEN\DWG\00-16 SITE PLAN 7-5-22.DWG 2/23/2022 11:06:26 AM

NOTE: UNAUTHORIZED ALTERATIONS OR ADDITIONS TO THIS DRAWING IS A VIOLATION OF SECTION 7209 (2) OF THE NEW YORK STATE EDUCATION LAW.

PROJECT # 00-16

Site Design Consultants
Civil Engineers • Land Planners
251-F Underhill Avenue, Yorktown Heights, NY 10598
(914) 962-4488 - Fax: (914) 962-7386
www.sitedesignconsultants.com

Engineer:
STATE OF NEW YORK * JOSEPH CARLO RIINA * 064431 * LICENSED PROFESSIONAL ENGINEER
Joseph C. Riina, P.E.
NYS Lic. No. 64431

Revisions:

No.	Date	Comments:
---	---	---

SCALE: 1" = 30'
DRAWN BY: CS
DATE: 7/6/22

DRIVEWAY PROFILES

PRELIMINARY SUBDIVISION PLAN
PREPARED FOR
DORCHESTER GLEN
1643 MAXWELL DRIVE
Town of Yorktown Westchester County

COPYRIGHT © 2022 BY SITE DESIGN CONSULTANTS, ALL RIGHTS RESERVED

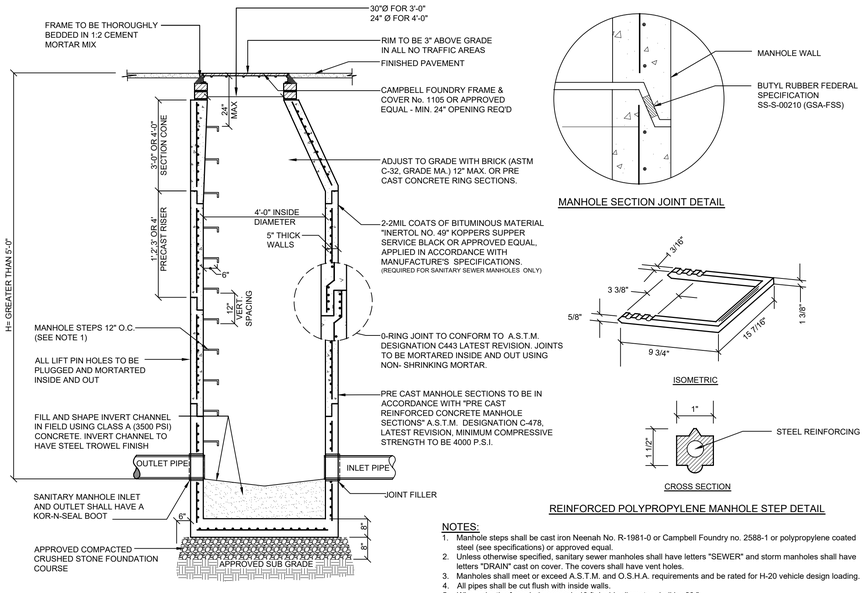

MANHOLE SECTION JOINT DETAIL

ISOMETRIC

CROSS SECTION

REINFORCED POLYPROPYLENE MANHOLE STEP DETAIL

NOTES:
1. Manhole steps shall be cast iron Neenah No. R-1981-0 or Campbell Foundry no. 2588-1 or polypropylene coated steel (see specifications) or approved equal.
2. Unless otherwise specified, sanitary sewer manholes shall have letters "SEWER" and storm manholes shall have letters "DRAIN" cast on cover. The covers shall have vent holes.
3. Manholes shall meet or exceed A.S.T.M. and O.S.H.A. requirements and be rated for H-20 vehicle design loading.
4. All pipes shall be cut flush with inside walls.
5. Where depth of manhole exceeds 10 ft, inside diameter shall be 60 ".

S-1 PRECAST CONCRETE SEWER MANHOLE DETAIL

NOT TO SCALE

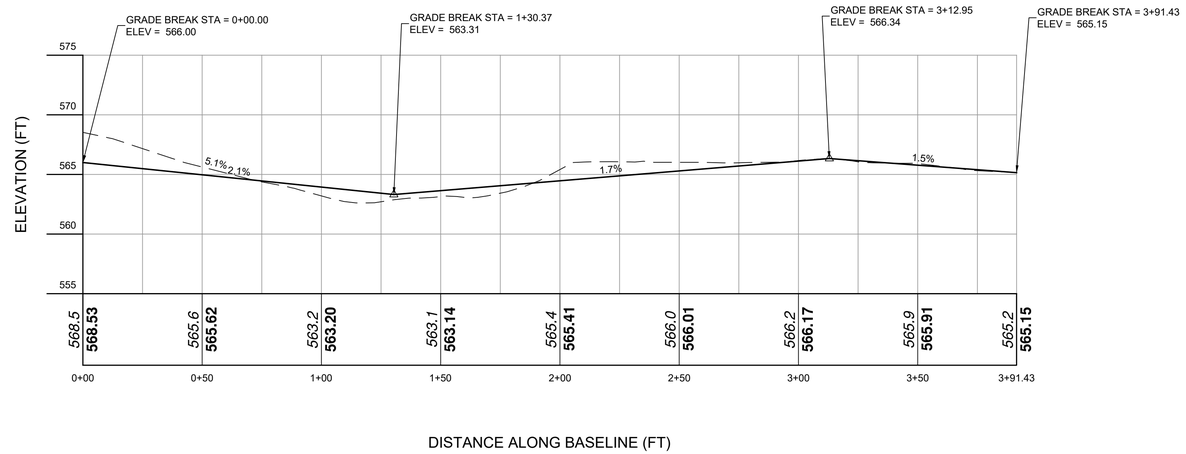

PRIVATE ROAD
VERT. SCALE: 1" = 10
HORIZ. SCALE: 1" = 50

R-1 PRIVATE ROAD PROFILE

NOT TO SCALE

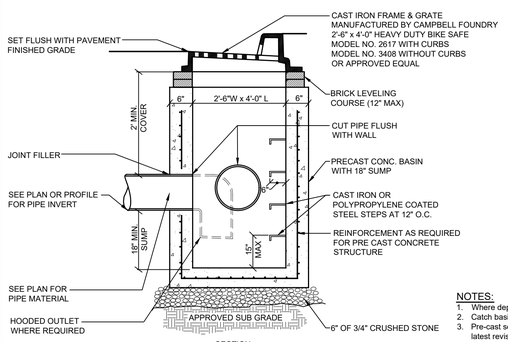

SECTION

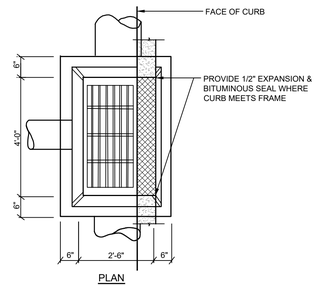

PLAN

NOTES:
1. Where depth of catch basin exceeds 10 ft, inside dimensions shall be 48" x 48".
2. Catch basin covers and structures shall meet or exceed A.S.T.M. and O.S.H.A. requirements.
3. Pre-cast sections shall be in accordance with "Pre-cast Reinforced Manhole Sections", A.S.T.M. Designation C-478, latest revision. Minimum compressive strength shall be 4000 psi. Structures shall be rated for H-20 vehicle loading.

D-1 TYPICAL CATCH BASIN DETAIL

NOT TO SCALE

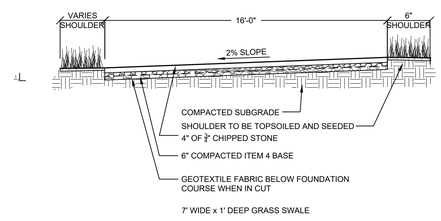

R-2 PRIVATE ROAD

NOT TO SCALE

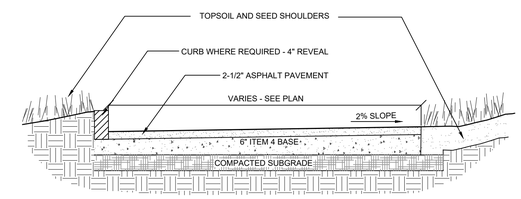

R-3 TYPICAL RESIDENTIAL DRIVEWAY DETAIL

NOT TO SCALE

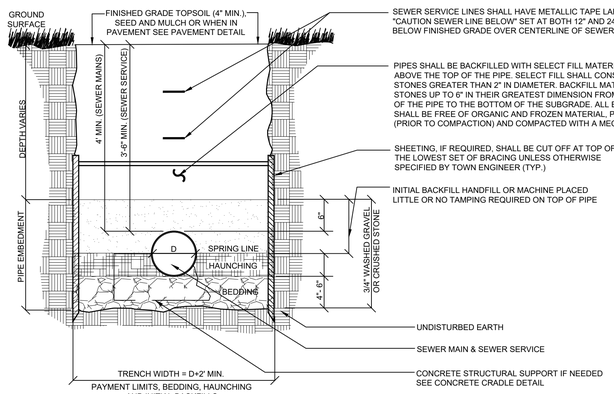

NOTES:
1. Sewer pipe shall be PVC SDR-35 in all cases except where depth of cover exceeds 10 ft. In cases where cover exceeds 10 ft, sewer pipe shall be a min. PVC SDR-26. When a sewer main is installed in a fill section, the fill shall be compacted to a min. 95% standard proctor and certified to the Town of Yorktown.
2. No rock is to project into within the edges of the trench. In rock excavation pipe shall be a min. of 6" over and away from rock.
3. Backfill shall be placed so as to not disturb the pipe alignment.
4. In areas where adequate cover can not be maintained for sewer main, proper protection shall be provided against freezing and superimposed loading.

S-2 SEWER MAIN / SEWER SERVICE TRENCH DETAIL

NOT TO SCALE

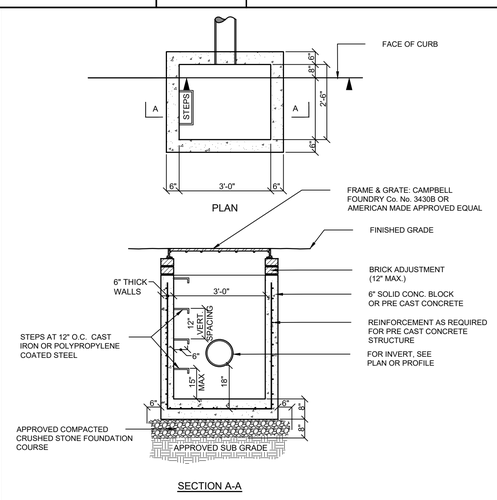

SECTION A-A

D-2 TYPICAL DRAIN INLET (TYPE DI) DETAIL

NOT TO SCALE

NOTE: UNAUTHORIZED ALTERATIONS OR ADDITIONS TO THIS DRAWING IS A VIOLATION OF SECTION 7209 (2) OF THE NEW YORK STATE EDUCATION LAW.

F:\2000\00-16 KINCART MAXWELL\DORCHESTER GLEN\ENGINEERING\CADD\3D-00-16 DORCHESTER GLEN\DWG\00-16 SITE PLAN 7-5-22.DWG 2/23/2022 11:06:26 AM

PROJECT # 00-16

Site Design Consultants
Civil Engineers • Land Planners
251-F Underhill Avenue, Yorktown Heights, NY 10598
(914) 962-4488 - Fax: (914) 962-7386
www.sitedesignconsultants.com

COPYRIGHT © 2022 BY SITE DESIGN CONSULTANTS, ALL RIGHTS RESERVED

Engineer: STATE OF NEW YORK JOSEPH C. RIINA 075179 LICENSED PROFESSIONAL ENGINEER
Joseph C. Riina, P.E.
NYS Lic. No. 64431

Revisions:

No.	Date	Comments:
---	---	---

SCALE: N.T.S.
DRAWN BY: CS
DATE: 7/6/22

SITE DETAILS

PRELIMINARY SUBDIVISION PLAN
PREPARED FOR
DORCHESTER GLEN
1643 MAXWELL DRIVE
Town of Yorktown Westchester County

Sheet 7 of 7

Guiding Eyes for the Blind Fence

Robyn Steinberg

From: Diana Juarez <dianaj@studio-arch.net>
Sent: Thursday, September 1, 2022 10:27 AM
To: Robyn Steinberg
Cc: John Tegeder; Nancy Calicchia; John Landi; Building Department; Chris Raffaelli; Nicole Ahrens
Subject: RE: 611 Granite Springs Rd. - Guiding Eyes - Property Fence - ActionItem:20052.02-002:lOw0q
Attachments: 20052.02 - A010 LO 5.0 progress.pdf; Salem Fence - Cutsheets 611 Granite Springs Rd..pdf

CAUTION: This email originated from outside of the organization. Do not click links or open attachments unless you recognize the sender and know the content is safe.

Hi Robyn,

I'm following up on the email below. The owner wants to obtain approvals for this property fence as soon as they can, and we were referred by the building department to go through planning first for approvals.

The front fence will be a white vinyl fence with motorized driveway gates to match the existing vinyl fence and the chain link for the left side and rear fence. I've attached the preliminary layout and the specifications for the fence , the gate operator & the access control. What would be the next steps for obtaining approval/permits for this?

Thank you.

Diana Juarez

Studio Architecture, DPC.
297 Knollwood Rd. Suite 209
White Plains, New York 10607
Office |914.266.8930 ext.103
Mobile | 845.709.3811
www.studio-arch.net
dianaj@studio-arch.net

From: Diana Juarez
Sent: Thursday, August 18, 2022 10:28 AM
To: 'jtegeder@yorktownny.org' <jtegeder@yorktownny.org>
Cc: Robyn Steinberg <rsteinberg@yorktownny.org>; Nancy Calicchia <ncalicchia@yorktownny.org>; 'jlandi@yorktownny.org' <jlandi@yorktownny.org>; 'building@yorktownny.org' <building@yorktownny.org>; Chris Raffaelli <chrisr@studio-arch.net>
Subject: 611 Granite Springs Rd. - Guiding Eyes - Property Fence - ActionItem:20052.02-002:lOw0q

Hi John,

We had briefly spoken previously about a property fence that the owners for guiding eyes want to install for the 611 property, see attached layout of the fence configuration. They want to install this fence because in case of evacuations

6'-0" CHAIN LINK FENCE SPECIFICATIONS

4'-0" ALUMINUM FENCE SPECIFICATIONS

GATE CONTROL SPECIFICATIONS

SITE SIGNAGE

SITE PLAN

SCALE: 1/32" = 1'-0"

studio ARCHITECTURE

STUDIO ARCHITECTURE, DPC
297 KNOLLWOOD RD. - SUITE 209
WHITE PLAINS, NEW YORK 10607
INFO@STUDIO-ARCH.NET
914.246.8930
A NEW YORK STATE PROFESSIONAL SERVICE CORPORATION

Guiding Eyes for the Blind

THIS DRAWING AND THE IDEAS AND DESIGNS INCORPORATED HEREWITH IS THE PROPERTY OF STUDIO ARCHITECTURE, DPC AND MAY NOT BE COPIED OR REPRODUCED WITHOUT THEIR PERMISSION. THIS DRAWING IS INTENDED FOR THE USE SOLELY FOR THE PROJECT DESCRIBED AND SHALL NOT BE USED FOR ANY OTHER PURPOSE. IT IS A VIOLATION OF THE LAW TO ALTER THESE DRAWINGS IN ANY WAY UNLESS ACTING UNDER THE DIRECTION OF A LICENSED ARCHITECT, AND IF ALTERED THE ALTERING ARCHITECT SHALL AFFIX THEIR SEAL AND NOTATION "ALTERED BY" FOLLOWED BY THEIR SIGNATURE AND DATE OF THE ALTERATION

PROGRESS PLOT
THIS DOCUMENT IS INTENDED FOR PLANNING PURPOSES ONLY
DATE: 07/28/2022 TIME: 5:32 PM

ISSUE

GUIDING EYES FOR THE BLIND
PROPERTY FENCE
611 GRANITE SPRINGS ROAD,
YORKTOWN HEIGHTS, NY 10598

DATE:	07/28/2022
JOB NUMBER:	20052.02
SCALE:	AS NOTED
DRAWN BY:	DJ

SITE PLAN

LAYOUT 5.0

A010

SCHEMATIC DESIGN

X:\2020\20052\02 Schematic Design\20052.02 Fence\Layout 5\2022-07-28 Layout 5.0\20052.02 - A010 LO 5.0.dwg, A010, 7/28/2022 5:32:48 PM, Diarta, AutoCAD PDF (General Documentation).pc3

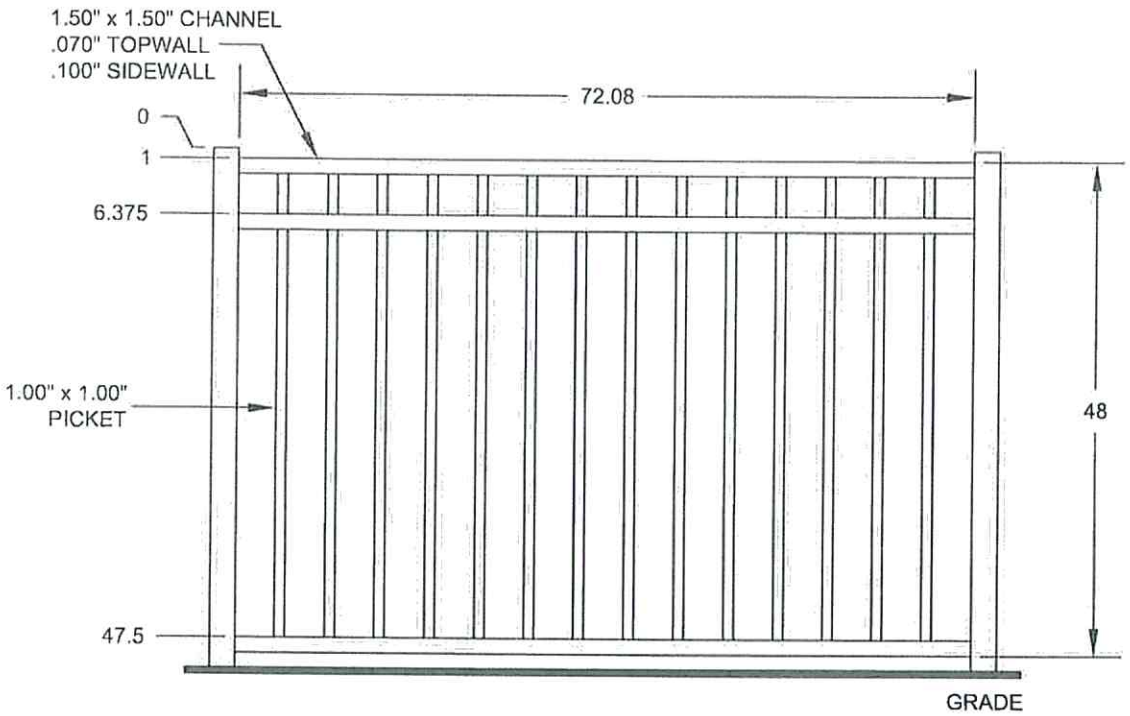

THE INFORMATION CONTAINED IN THIS DRAWING IS PROTECTED BY COPYRIGHT AND PATENT LAWS OF THE UNITED STATES AND OTHER COUNTRIES. ANY REPRODUCTION IN PART OR AS A WHOLE WITHOUT WRITTEN PERMISSION IS PROHIBITED.

PO/JOB NAME:

72.08" PANEL ASCOT
3-CH 48" INDUSTRIAL - FLUSH BTM - RACKABLE

DRAWN: jgroves	APPROVAL SIGNATURE (REQUIRED):	PART NUMBER: Q20083476-R0	
DATE: 7/28/2022		DC NUMBER: DC-27193	QUO NUMBER: QUO-#

\\bros-fs01\BRO-Production\AG-Dwg Files\22 QUOTE DWGS\Q20083476-R0.dwg, 7/28/2022 11:10:38 AM, Adobe PDF, JG

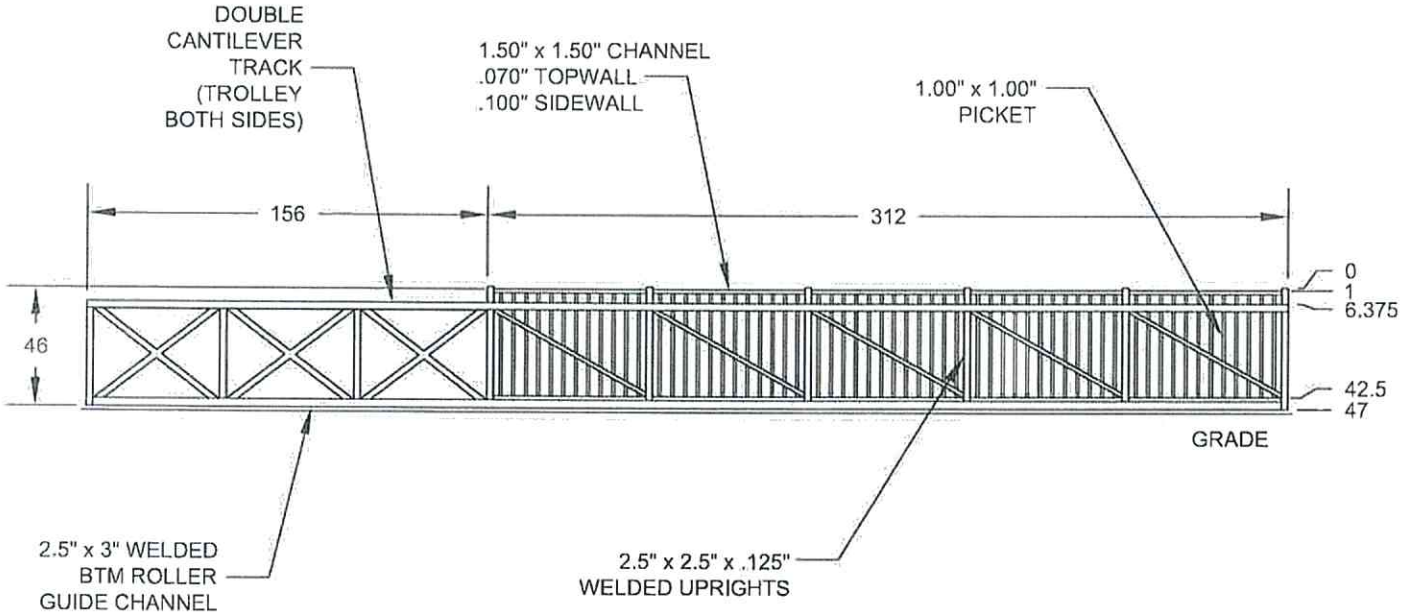

PLEASE CIRCLE PREFERRED OPENING

LEFT HAND OPENING	RIGHT HAND OPENING
GATE POST, NOSE POST; TAIL, OPEN	NOSE POST, GATE POST; OPEN, TAIL
TAIL, OPEN; GATE POST, NOSE POST	OPEN, TAIL; NOSE POST, GATE POST

THE INFORMATION CONTAINED IN THIS DRAWING IS PROTECTED BY COPYRIGHT AND PATENT LAWS OF THE UNITED STATES AND OTHER COUNTRIES. ANY REPRODUCTION IN PART OR AS A WHOLE WITHOUT WRITTEN PERMISSION IS PROHIBITED.

PO/JOB NAME:

Barrette OUTDOOR LIVING

312" CANTILEVER ASCOT
3-CH 48" INDUSTRIAL W/ DBL TRACK (TROLLEY BOTH SIDES)

DRAWN:	APPROVAL SIGNATURE (REQUIRED):	PART NUMBER:	
jgroves		Q20083476-R0	
DATE: 7/28/2022		DC NUMBER: DC-27193	QUO NUMBER: QUO-#

\\bros-fs01\BRO-Production\AG-Dwg Files\22 QUOTE DWGS\Q20083476-R0.dwg, 7/28/2022 11:11:12 AM, Adobe PDF, JG

Carter, Tim

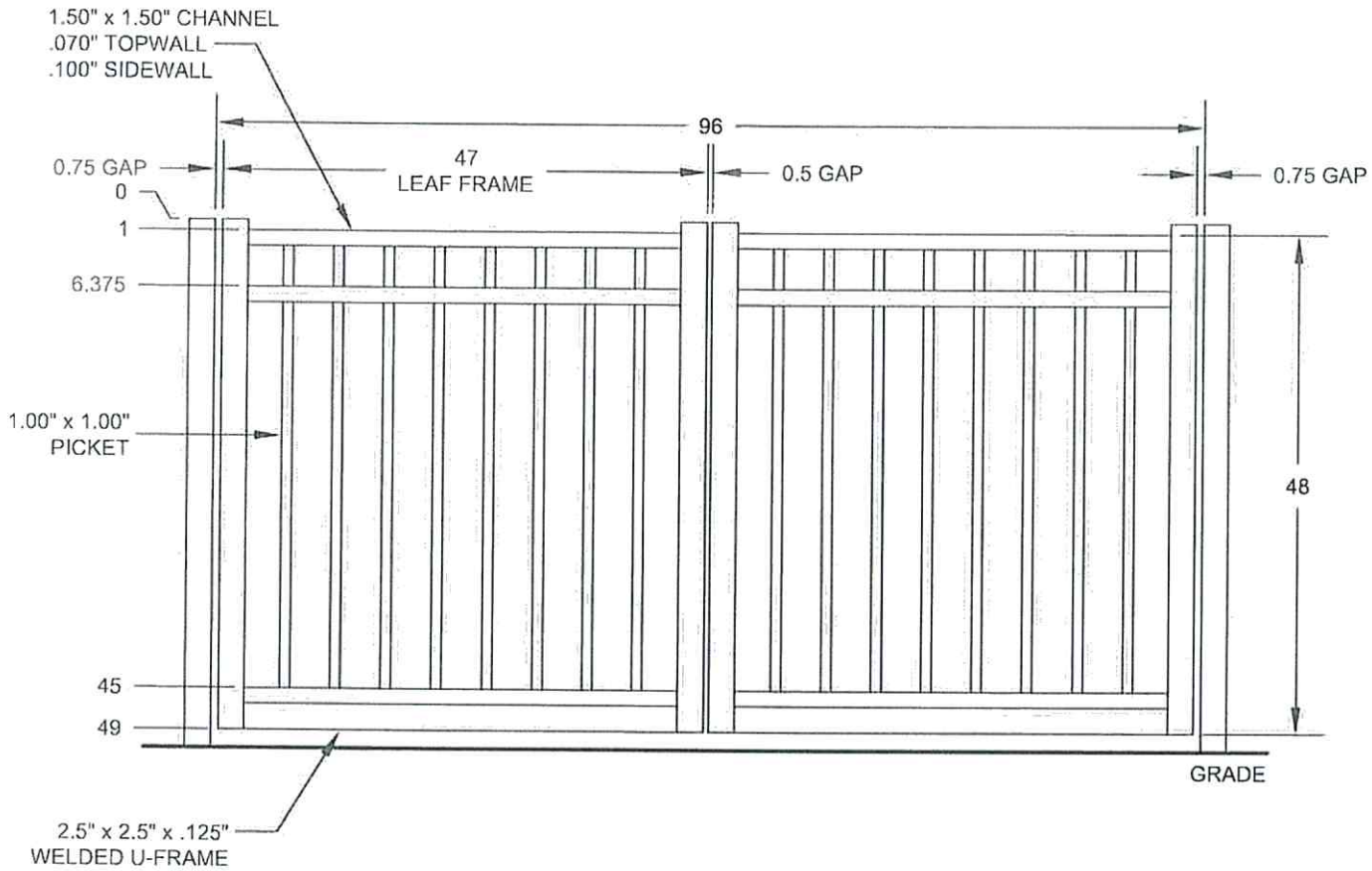

HINGE & LOCKBOX LOCATIONS

IF YOUR GATE REQUIRES A LOCKBOX OR SPECIAL HINGES, PLEASE NOTE HINGE SIDE, SWING AND LOCATION OF LOCKBOX.

EXAMPLE	GATE
FENCE LINE — WELDS INSIDE / WELDS OUTSIDE	FENCE LINE — WELDS INSIDE / WELDS OUTSIDE

THE INFORMATION CONTAINED IN THIS DRAWING IS PROTECTED BY COPYRIGHT AND PATENT LAWS OF THE UNITED STATES AND OTHER COUNTRIES. ANY REPRODUCTION IN PART OR AS A WHOLE WITHOUT WRITTEN PERMISSION IS PROHIBITED.

POJOB NAME:

Barrette OUTDOOR LIVING

96" DBL GATE ASCOT
3-CH 48" INDUSTRIAL

DRAWN:	APPROVAL SIGNATURE (REQUIRED):	PART NUMBER:	
jgroves		Q20083476-R0	
DATE: 7/28/2022		DC NUMBER: DC-27193	QUO NUMBER: QUO-#

\\bros-fs01\BRO-Production\AG-Dwg Files\22 QUOTE DWGS\Q20083476-R0.dwg, 7/28/2022 11:11:11 AM, Adobe PDF, JG

Carter, Tim

V2 LONG-RANGE UHF READER

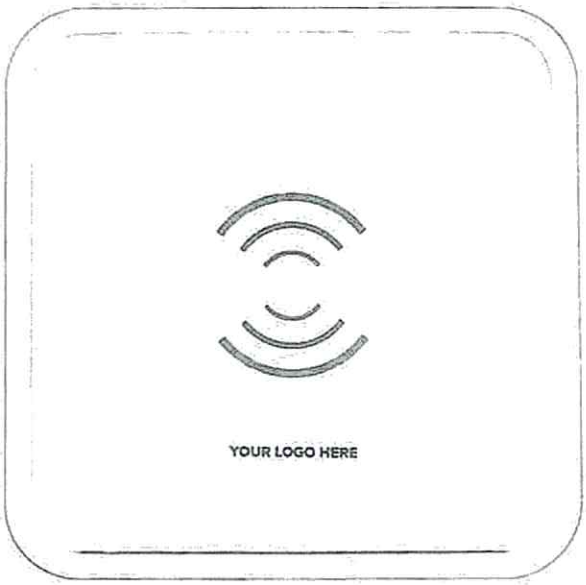

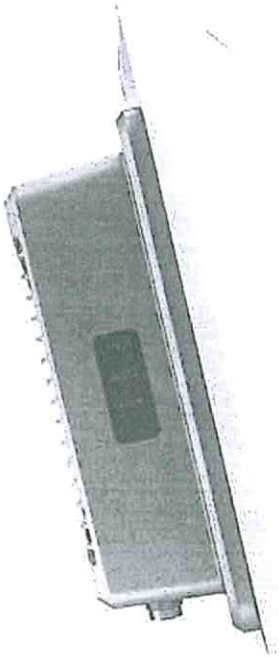

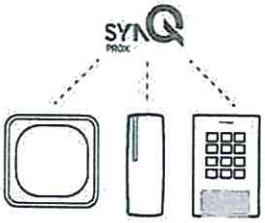

MOBILE CREDENTIALS AVAILABLE
USING SYNQ

Transmitter SOLUTIONS®

SECONDARY ANTENNA

V2 UHF Long-range reader's new design gives you the ability to add a secondary antenna without having to purchase a completely new reader. This make for an easier install and better coverage.

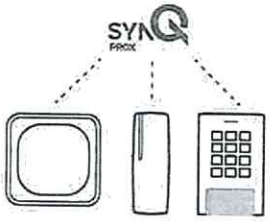

MOBILE CREDENTIALS AVAILABLE
USING SYNQ

Ask your sales rep about SynQ today!

LONGER WARRANTY

Transmitter Solutions offers a 5-year limited warranty which more than doubles the industry standard giving you the peace-of-mind that it will last.

SPECIFICATIONS

- IP65 Rated
- 1 - 30 Foot Read Range
- Supports 26-bit Wiegand Input
- Working Environment: -9F - 159F

DIMENSIONS

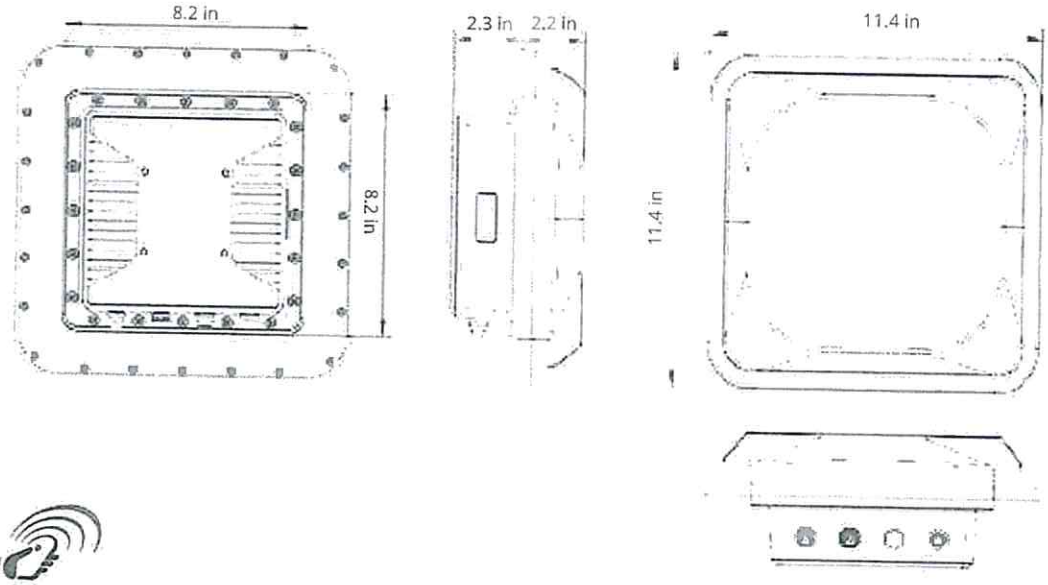

Transmitter SOLUTIONS®

Dolphin™ Access Systems

Transmitter SOLUTIONS®

UHF Reader Tag Installation

The UHF Sticker Tag should be installed on the upper center or upper corner portion of the windshield. If the upper portion of the windshield is tinted with an aftermarket conductive tint, use placement Option B.

Mirror Post Attached Low On Windshield

Choose placement **Option A** if the mirror post is attached low on the windshield .

Option A

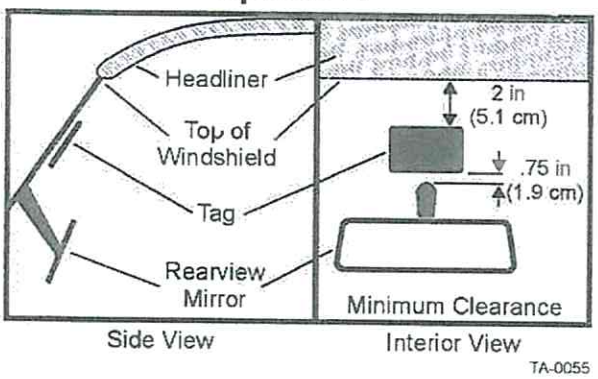

Mirror Post Attached High On Windshield

Choose placement **Option B** if the mirror post is attached high on the windshield or if the windshield is tinted with a conductive tint.

Option B

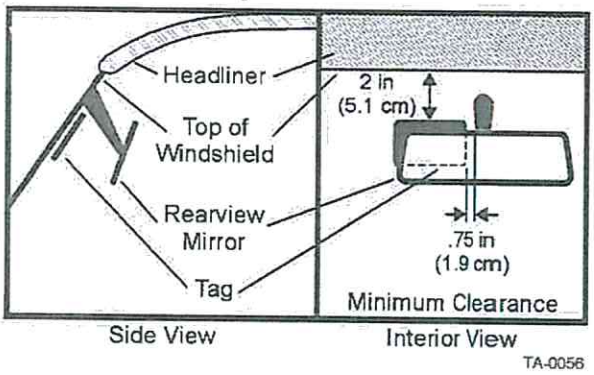

Mirror Post Attached to Headliner

Choose placement **Option C** if the mirror post is attached to the headliner. If the upper portion of the windshield is tinted with an aftermarket conductive tint, place the tag 2 inches below the tinted area.

Option C

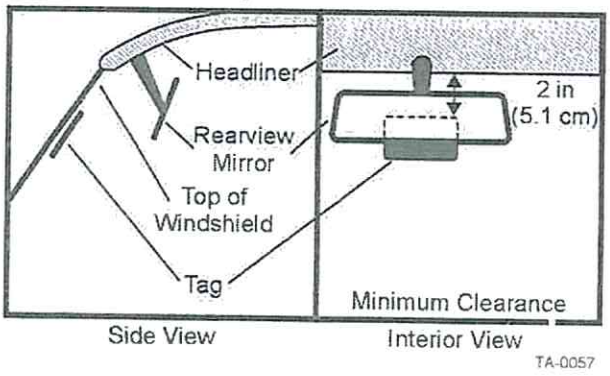

IMPORTANT!

When installing credentials be sure that they are installed horizontally as shown.

- ISO Prox Style Card
- Card Holder
- Adhesive Sticker

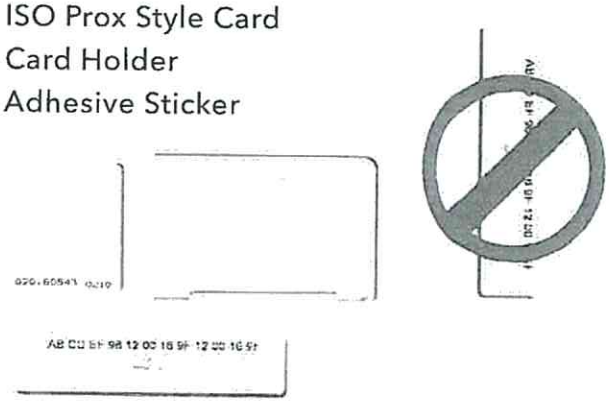

If the UHF reader antenna is installed to the **left** of the vehicle, optimal tag position is on the left side of the vehicle.

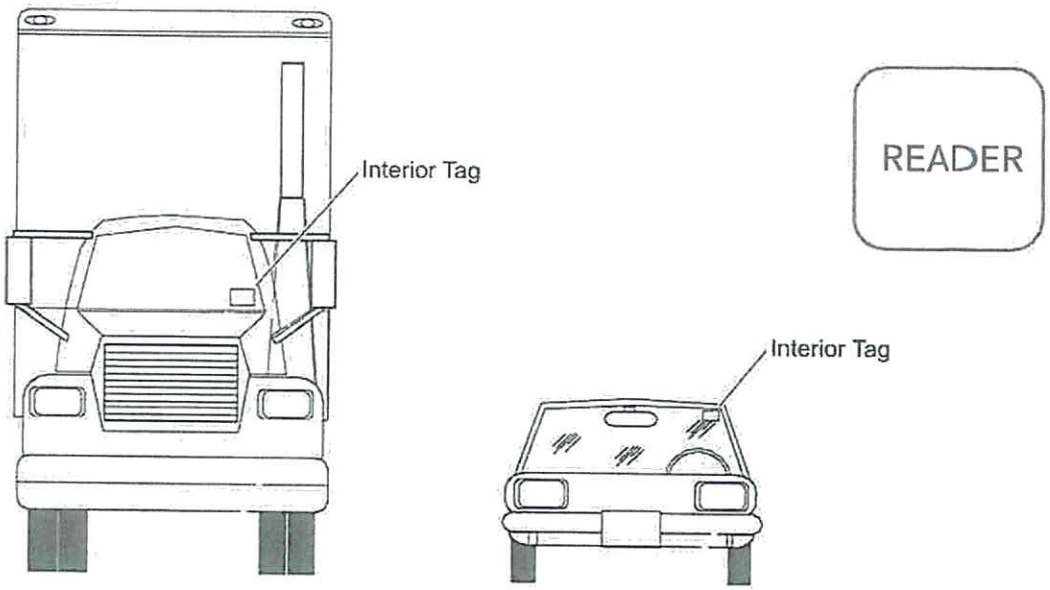

If the UHF reader antenna is installed to the right of the vehicle, optimal tag position is on the **right side** of the vehicle.

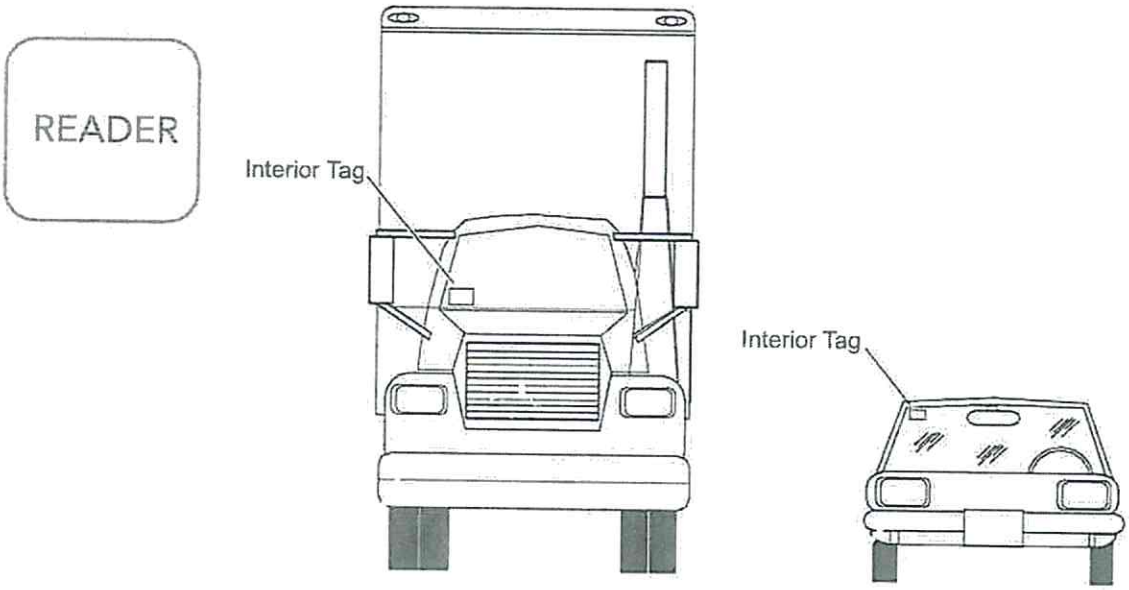

Antenna Location Relative to Tag Position

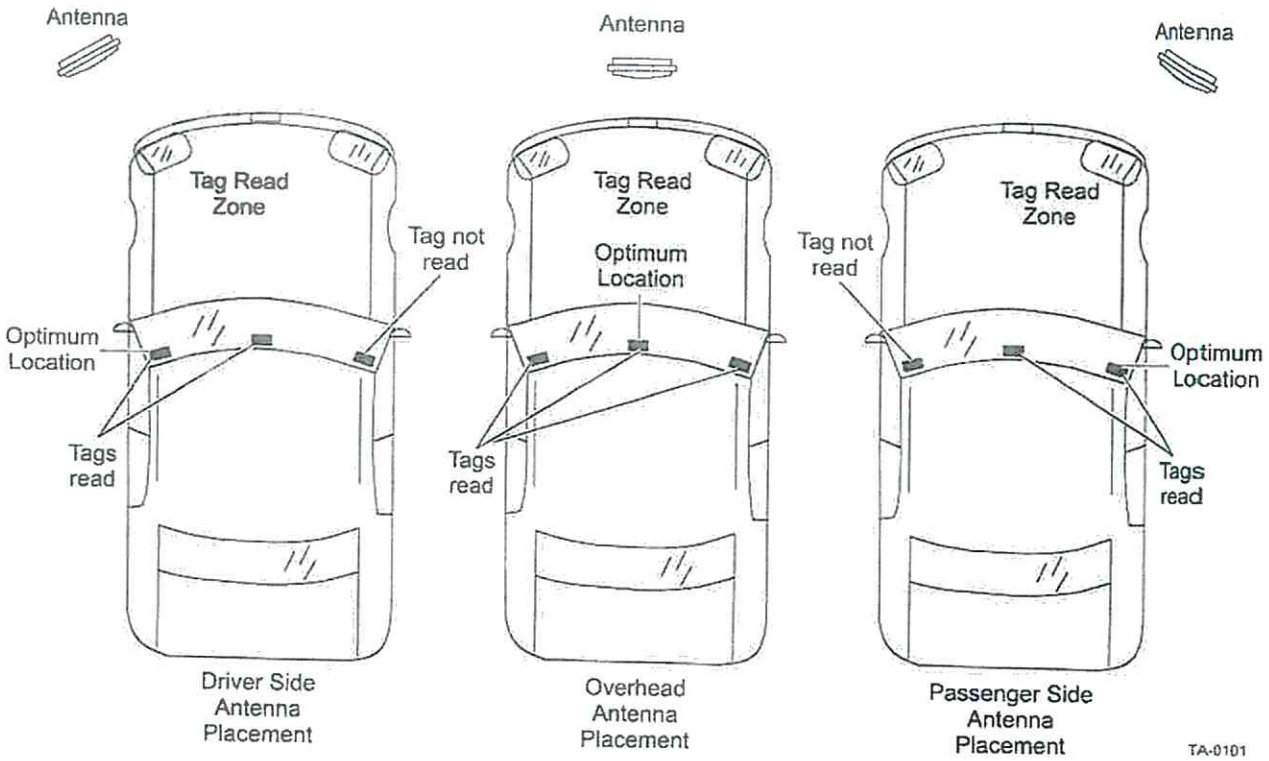

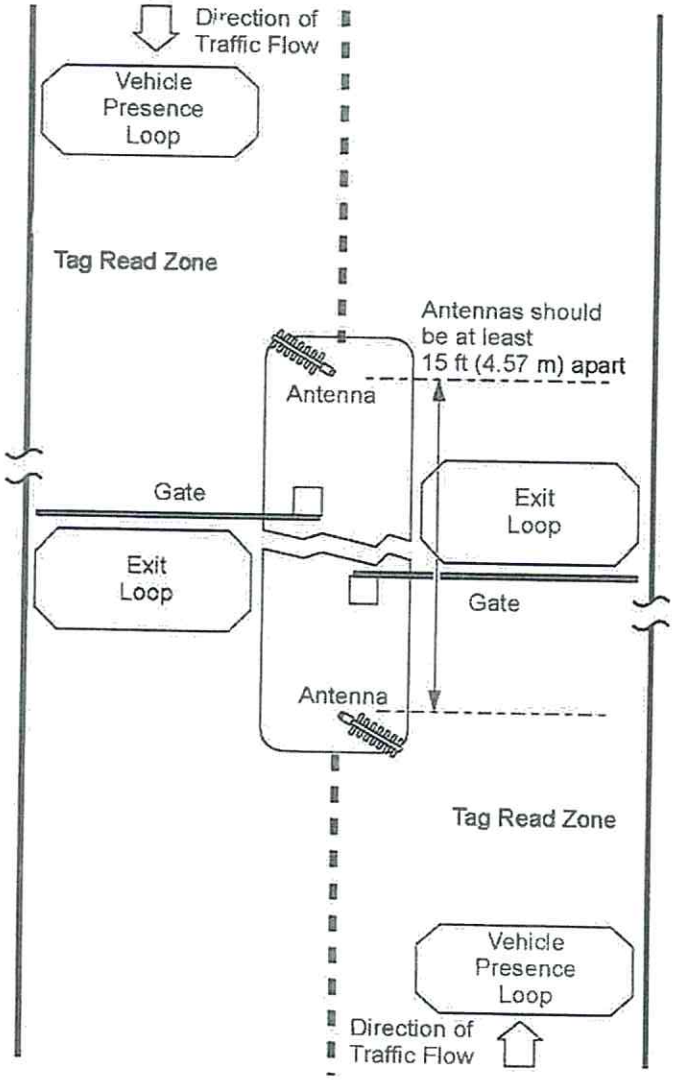

Ticket Island Configuration

This illustrates a parking garage application with each Reader and antenna mounted on the ticket island to read tags mounted on theinside center windshield or on the center front vehicle bumper. The Reader antenna placement may require the vehicle to stop before the gate opens.

Transmitter SOLUTIONS®
(866) 975-0101
(866) 975-0404 fax
www.transmittersolutions.com

DOORKING

9150 VEHICULAR SLIDE GATE AC OPERATOR

• RESIDENTIAL • COMMERCIAL • INDUSTRIAL

- Electronic magnetic limits eliminate old style mechanical switches that can wear out, break or fail
- Automatic self-setting limits mean no limit switch adjustments – ever
- Safety – built-in mechanical and electronic reverse system
- Advanced microprocessor control board features programming switches to set the mode of operation required and has ports for DKS plug-in loop detectors to simplify wiring
- 5-year limited warranty

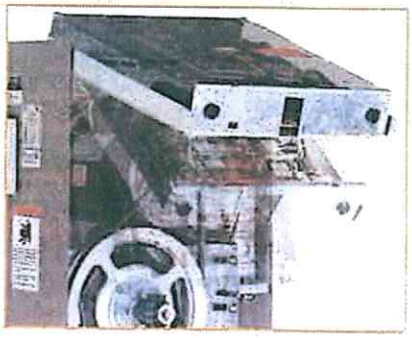

ACCESS CONTROL SOLUTIONS

9150 VEHICULAR SLIDE GATE OPERATOR

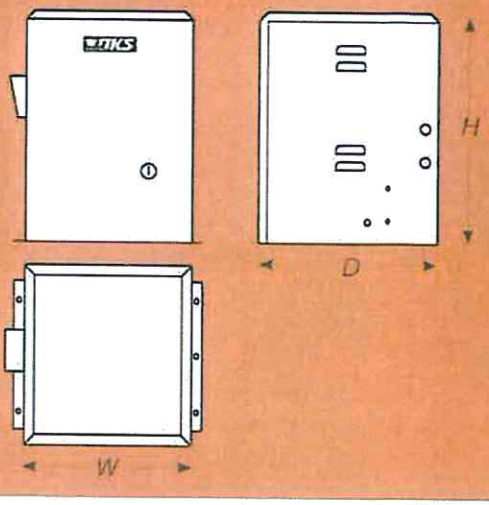

9150 1/2 HP & 1 HP

15.25" W x 24.75" H x 16.75" D *(38.7cm W x 62.8cm H x 42.5cm D)*

	CLASS OF OPERATION	MAX GATE LENGTH *	MAX GATE WEIGHT *	MOTOR	INPUT
9150 1/2 HP	I, II, III, IV	30 Ft *(9.1 m)*	1000 Lbs. *(453.6 kg)*	1/2HP Continuous Duty AC Motor	115 VAC, 60 HZ, 5.4A 208 VAC, 60 Hz, 2.8A** 230 VAC, 60 Hz, 2.7A** 460 VAC, 60 Hz, 1.4A**
9150 1HP	I, II, III, IV	45 Ft *(13.7 m)*	1500 Lbs. *(680.8 kg)*	1HP Continuous Duty AC Motor	115 VAC, 60 HZ, 9.7A 208 VAC, 60 Hz, 5.0A ** 230 VAC, 60 Hz, 4.9A ** 460 VAC, 60 Hz,2.5A**

* Assumes gate is on level ground, in good condition with properly adjusted hardware. Other external factors may affect the performance of the gate operator

** These operators use a step-down transformer to achieve 115 VAC operating voltage

Technical Features

Mechanical

Frame: G90 Galvanized steel to prevent rusting

Cover: Steel cover is plated and painted

Primary Reduction: Single cog belt

Speed: Approximately 10 in/sec (254 mm/sec)

Chain: Unit is shipped with 20-ft (6m) of #40 roller chain, chain brackets, hardware

Fail-Safe release standard

Options

Heater kit for cold weather environements

Base Plate for post mounting

Fail-Secure release kit

Electrical

Automatic limit adjustment

Auto-close timer 1-23 sec

Selectable stop / reverse loop function

Built in On / Off switch

Built in alarm reset switch

Programming switches allow you to set desired mode of operation

Partial-open and anti-tailgating features

Two 115 VAC convenience outlets for accessory transformers

Automatically assumes fail-safe mode when an entrapment condition exists

Ports for plug-in open and reverse loop detectors. DKS plug-in detectors only

Gate Tracker reporting output provides operator data to access control system (DKS 1833, 1835, 1837, 1838 only)

Miscellaneous

Environmental: 10°F to 140°F *(-12°C to 62°C)*

Thermostatically controlled heater kit recommended for colder environments

Operator requires Type B1 or Type B2 entrapment protection devices with 10K resistive termination, otherwise the operator will not function

Shipping weight approximately 125-185 Lbs *(67.7-83.9 kg)*

Intertek

Distributed by:

DOORKING, INC.
120 Glasgow Avenue, Inglewood, California 90301 U.S.A
Tel: 310-645-0023 FAX: 310-641-1586 www.doorking.com

© 2018 All Rights Reserved Product specifications may change without notice

Rev 4/18

TB Referral
Gulf Gas Station

RECEIVED
PLANNING DEPARTMENT
SEP 1 - 2022
TOWN OF YORKTOWN

8/30/2022

Town of Yorktown
1974 Commerce Street
Yorktown Heights, NY 10598

Re: Town of Yorktown Review Comments (ABACA)
7 Eleven Store No. 38921
3451 Crompond Road
Peekskill, New York 10567

Dear Town of Yorktown,

Sevan Multi-Site Solutions is an agent for the Applicant, 7-Eleven Inc., for the proposed existing store fueling remodel for the Gulf gas station located at 2451 Crompond Road, Peekskill, NY.

7-Eleven Inc. submitted a Special Use Permit application in January 2022 for the proposed project. The project is moving forward with anticipated construction dates of October 31, 2022, through December 14, 2022. The proposed project will include the replacement of the fuel system equipment at the subject location. This includes removing and replacing the fuel dispensers, the underground storage tanks, pumps and piping, and all associated site work. We will also be adding a new fuel canopy as well. The canopy, pylon sign, and dispensers will have color and signage per the attached brand book. No work is proposed to the existing building or building signage. Please see below for specifics of new equipment.

(1) NEW GILBARCO 3+0 DISPENSERS
(2) NEW GILBARCO 3+1 DISPENSERS FOR DIESEL
(1) 10' DIA. 15K GAL. DW FIBERGLASS UST FOR UNLEADED FUEL
(1) 10' DIA. 15K GAL. SPLIT DW FIBERGLASS UST - 8K DIESEL/7K PREMIUM
(3) 1.5 hp FIXED SPEED STP FOR DIESEL
(3) ATG's (1 PER STP SUMP)
(3) PRODUCT FILL BUCKETS (1 EACH UST)
1.5" FLEX PIPING IN 4" CHASE PIPING FOR RUL, PUL AND DIESEL FUELS
2" SW FRP VENT PIPING (UST's TO REMOTE VENT SUMP)
(1) NEW BRAVO VENT BOX FOR RUL, PUL AND DIESEL
(1) NEW 36'-0" X 43'-0" FUELING CANOPY FOR THREE (3) DISPENSERS

The ABACA provided comments in March 2022. Please see the below responses, **in red**, provided to aid in your continued review associated with the Special Permit Application.

Advisory Board on Architecture & Community Appearance, dated March 19, 2022.

1. The Board feels that more information is required and requests for a representative to be present in order to gain a better understanding of the proposal.
   A representative will attend a meeting to discuss the proposed project.
2. The Board feels that in coordination with this project, improvements to the site, landscaping, and existing structure should be considered.
   Any disturbed area or landscaping will be restored to the current condition or better
3. The Board requests for the application to submit more information with respect to the building and branding for 7-11 and any proposed building renovations so that it can understand the total site impact and how the two brands will be integrated on the site.
   A brand book has been provided. The Gulf logo will be displayed. No 7-Eleven Inc. branding or logos will be used.
4. The Board suggests for the applicant to consider a monument sign as opposed to the pylon sign and is wondering if additional branding at the roadway for 7-11 will be required.
   An existing pylon sign is currently located at this location. The project proposes to reface the existing cabinets and paint the cabinet, retainers, and pole. The new cabinet will have digital prices. A monument sign would be difficult to view. 7-Eleven Inc. branding is not proposed.
5. The canopy design is generally acceptable to the Board but would like additional detailing to confirm that only the letters and logos will be illuminated. The Board also requests for the signage to be channel letters.
   The letters and logo will be illuminated. The photometric drawing displays the locations of the exterior lighting elements proposed.
6. The Board appreciates the photometric lighting plan submitted but is requesting for the applicant to provide additional detail and an expanded plan showing the entire site to verify that the proposed lighting does not exceed the code requirement of 1-foot candle at the property line. Any additional lighting and fixtures on the site should also be submitted by the applicant for review.
   The photometric drawing has been updated to include the foot candles calculated at grade. The average lighting at the property line is 0.29 candle feet.

If you have any further questions, please feel free to contact us.

Thank you,

Kristen Schawalder

Kristen Schawalder
Project Manager
412-651-6182
Kristen.Schawalder@sevansolutions.com

7-ELEVEN

EXISTING STORE W/ FUELING REMODEL
STORE NO. 38912
3451 Crompond Road
Yorktown Heights, NY 10598

SHEET INDEX

FUELING CANOPY AND UNDERGROUND STORAGE TANKS	
G0.0	FUELING CANOPY COVER SHEET AND INDEX
G0.1	FUELING ARCHITECTURAL SITE PLAN
G0.2	FUELING TRUCK ROUTE
G0.3	FUELING DEMOLITION PLAN
G1.0	FUELING PIPING AND TANK PLAN
G2.0	NOT USED
G3.0	TANK SECTIONS
G4.0	TANK SUMP DETAILS - SINGLE OUTPUT
G4.1	TANK SUMP DETAILS
G5.0	DISPENSER AND SUMP DETAILS
G6.0	REMOTE VENT AND DETAILS
G6.1	FUELING DIMENSIONAL PLAN
G7.0	EQUIPMENT SCHEDULES
G7.1	EQUIPMENT SCHEDULES
G8.0	FUELING CANOPY LAYOUT - 3 STACKED
G8.1	SIGNAGE DETAILS
G9.0	UST ELECTRICAL PLAN, ONE-LINE DIAGRAM AND PANEL SCHEDULE
G9.1	N.E.C. CLASSIFIED AREA
G10.0	MISCELLANEOUS ELECTRICAL DETAILS
G11.0	ISOLATION RELAY BOX DETAIL
G12.0	SITE MONITORING EQUIPMENT DIAGRAM
G13.0	FUELING SPECIFICATIONS
G14.0	FUELING SPECIFICATIONS
G15.0	FUELING SPECIFICATIONS
G16.0	FUELING SPECIFICATIONS
G17.0	FUELING SPECIFICATIONS
CS1	CANOPY STRUCTURAL NOTES AND PLANS
CS2	CANOPY STRUCTURAL SECTIONS AND DETAILS
AB1	CANOPY FOUNDATION SECTIONS AND DETAILS

VICINITY MAP

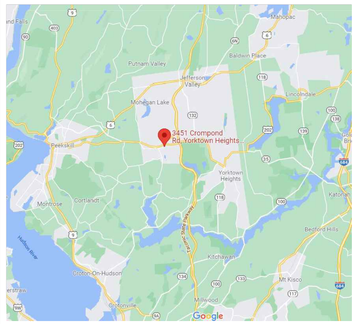

N

SITE LOCATION MAP

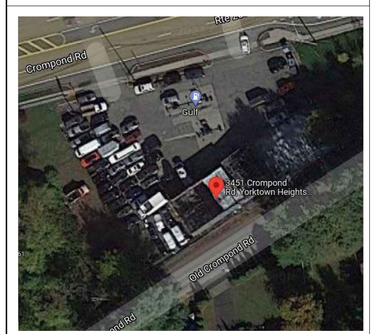

N

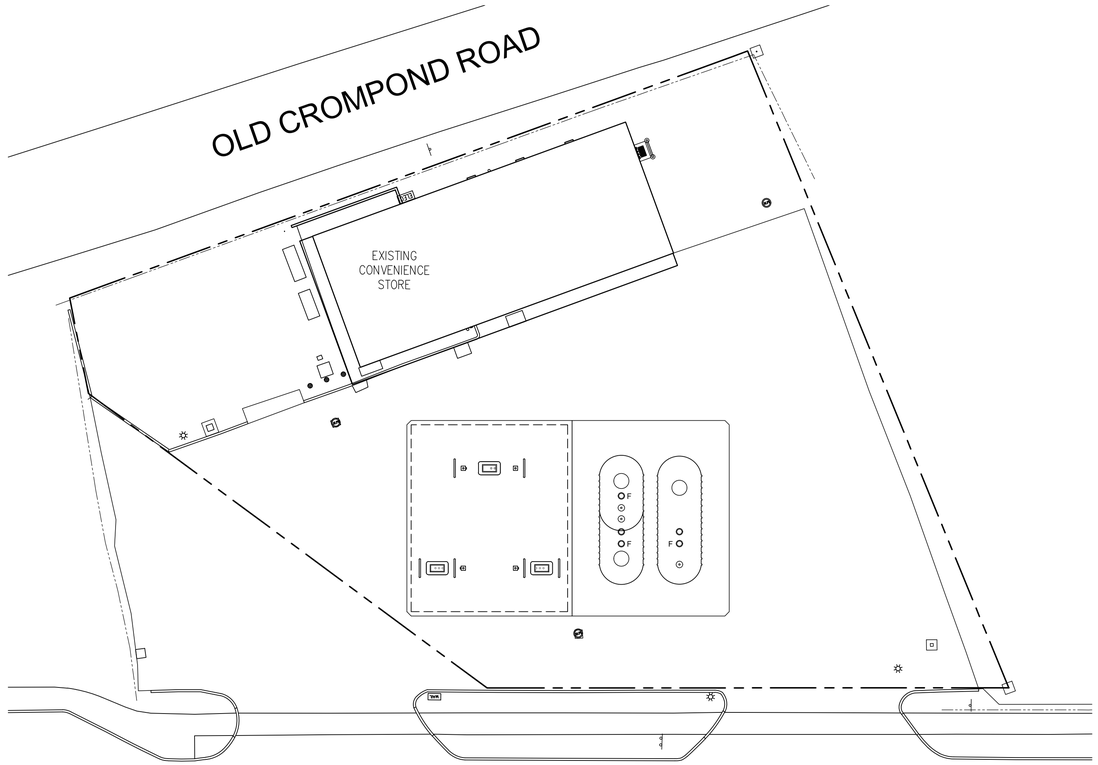

N

PROJECT DATA

2020 BUILDING CODE OF NEW YORK STATE
2020 MECHANICAL CODE OF NEW YORK STATE
2020 PLUMBING CODE OF NEW YORK STATE
2020 ENERGY CONSERVATION CONSTRUCTION CODE
2020 NATIONAL ELECTRICAL CODE (NEC)
2020 FIRE CODE OF NEW YORK STATE
2020 FUEL GAS CODE OF NEW YORK STATE

NFPA 30 FLAMMABLE AND COMBUSTIBLE LIQUIDS CODE-2015 EDITION
NFPA 30A CODE FOR MOTOR FUEL DISPENSING FACILITIES AND REPAIR GARAGES-2015 EDITION
NFPA 1 UNIFORM FIRE CODE HANDBOOK

SUMMARY OF WORK

- GRADING AND SITEWORK.
- ASSOCIATED UNDERGROUND TANKS AND PIPING.
- FUELING STATION DESCRIPTION:
  - (1) NEW GILBARCO 3+0 DISPENSERS
  - (2) NEW GILBARCO 3+1 DISPENSERS FOR DIESEL
  - (1) 10' DIA. 15K GAL. DW FIBERGLASS UST FOR UNLEADED FUEL
  - (1) 10' DIA. 15K GAL. SPLIT DW FIBERGLASS UST - 8K DIESEL/7K PREMIUM
  - (3) 1.5 hp FIXED SPEED STP FOR DIESEL
  - (3) ATG's (1 PER STP SUMP)
  - (3) PRODUCT FILL BUCKETS (1 EACH UST)
  - 1.5" FLEX PIPING IN 4" CHASE PIPING FOR RUL, PUL AND DIESEL FUELS
  - 2" SW FRP VENT PIPING (UST's TO REMOTE VENT SUMP)
  - (1) NEW BRAVO VENT BOX FOR RUL, PUL AND DIESEL
  - (1) NEW 36'-0" X 43'-0" FUELING CANOPY FOR THREE (3) DISPENSERS

PROJECT DIRECTORY

OWNER: 7-ELEVEN INC
3200 HACKBERRY ROAD
IRVING, TX 75063

MEP ENGINEER: CORE STATES GROUP
1700 INDUSTRIAL DRIVE, SUITE B
ROGERS, AR 72756
CONTACT: DAVID LEIFFER
479.986.4400
EMAIL: DLEIFFER@CORE-STATES.COM

REFERENCE SYMBOLS

- NORTH ARROW
- HEIGHT ELEVATION INDICATOR (X.X.X. / X'-XX")
- DOOR TAG (000A)
- ENLARGED DETAIL INDICATOR (XX / X-XXX)
- GRID LINE INDICATOR (X)
- WINDOW TAG (XX)
- WALL TAG (XX)
- ROOM TAG (XXXXXXXX / XXX)
- REVISION DELTA (X)
- SPOT ELEVATION INDICATOR (X.X.X. / X'-XX")
- KEY NOTE INDICATOR (XX)
- FINISH INDICATOR (XX)
- SECTION CUT INDICATOR (X / XX.X)
- ELEVATION INDICATOR (XX.X / X)
- EQUIPMENT TAG (FOR LIST REF G7.0) (XXX)

Rev. #	Date	Description

Proto 12-01-2020

7-ELEVEN, INC.
3200 HACKBERRY ROAD, IRVING TEXAS 75063

7-ELEVEN #38912
3451 CROMPOND ROAD
YORKTOWN HEIGHTS, NEW YORK 10598

FUELING CANOPY COVER SHEET AND INDEX

CORE STATES GROUP
CORESTATES ARCHITECTURE | ENGINEERING P.C.
NEW YORK
CERTIFICATE OF AUTHORIZATION
No. 0026797
46 East Main Street
Suite 200
Somerville, NJ 08876
908.462.3700
www.core-states.com

Job#:	SEI-32507
Scale:	AS NOTED
Date:	08/24/21
Drawn By:	GJD
Checked By:	CGC

Documents prepared by Core States Group are to be used only for the specific project and purpose for which they were intended. Any extension of use to other projects, by owner or any other party, without the express written consent of Core States Group is done at the user's own risk. If used in a way other than originally intended, user will hold Core States Group harmless from all claims and losses.

STATE OF NEW YORK · DAVID M LEIFFER · 092655 · LICENSED PROFESSIONAL ENGINEER

11-16-2021

SHEET:
G0.0

FUELING - USA

PRINTED BY: GDELAROSA
DRAWING NAME: 38912 - G0.0 FUELING CANOPY COVER SHEET AND INDEXLONG PRINT DATE: Nov 16, 2021 - 5:35pm

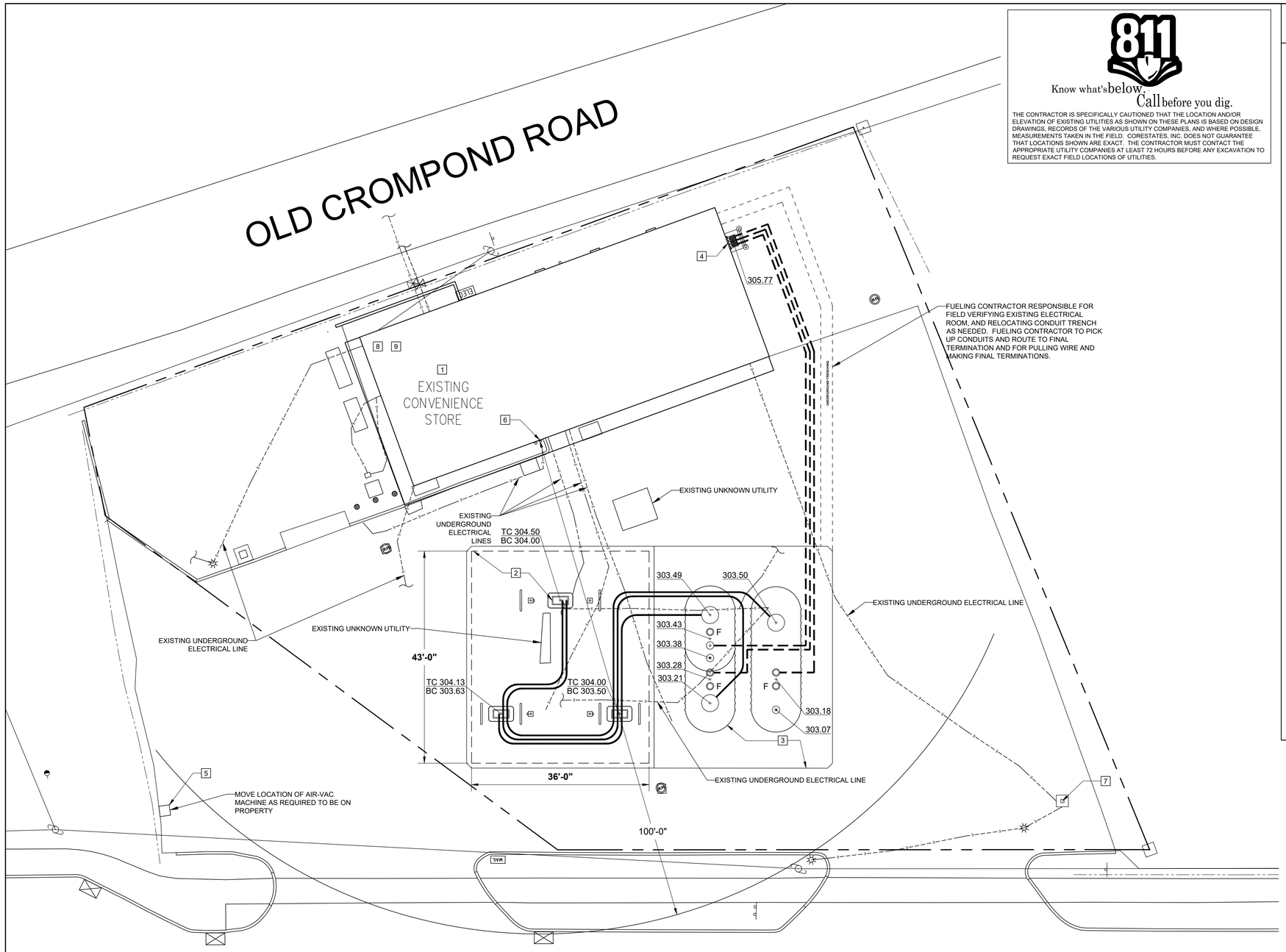

1 ARCHITECTURAL SITE PLAN
3/32" = 1'-0"

811 Know what's below. Call before you dig.

THE CONTRACTOR IS SPECIFICALLY CAUTIONED THAT THE LOCATION AND/OR ELEVATION OF EXISTING UTILITIES AS SHOWN ON THESE PLANS IS BASED ON DESIGN DRAWINGS, RECORDS OF THE VARIOUS UTILITY COMPANIES, AND WHERE POSSIBLE, MEASUREMENTS TAKEN IN THE FIELD. CORESTATES, INC. DOES NOT GUARANTEE THAT LOCATIONS SHOWN ARE EXACT. THE CONTRACTOR MUST CONTACT THE APPROPRIATE UTILITY COMPANIES AT LEAST 72 HOURS BEFORE ANY EXCAVATION TO REQUEST EXACT FIELD LOCATIONS OF UTILITIES.

SCOPE OF WORK

1 INSTALL NEW XERXES 15,000 GALLON 10' DIA DOUBLE WALL FIBERGLASS UNDERGROUND STORAGE TANK (UST) FOR REGULAR FUEL.

2 INSTALL NEW XERXES 15,000 GALLON 10' DIA DOUBLE WALL FIBERGLASS UNDERGROUND SPLIT STORAGE TANKS (UST'S) FOR 8,000 GALLONS DIESEL AND 7,000 GALLONS PREMIUM FUELS.

3 INSTALL (3) NEW FE PETRO 1.5 HP FIXED SPEED SUBMERSIBLE PUMP WITH INTAKE FILTER FOR RUL, PUL AND DSL FUELS.

4 INSTALL (1) NEW GILBARCO 700S 3+0 DISPENSER AND (2) NEW GILBARCO 700S 3+1 DISPENSERS.

5 INSTALL NEW OPW LOOP SYSTEM FROM NEW UST'S TO NEW DISPENSERS.

6 INSTALL (3) NEW VAPOR/VENT RISERS WITH BRAVO VENT BOX AND BRAVO VAPOR VENT RACK FOR SUPPORT.

7 INSTALL NEW 2" FIBERGLASS PIPING FROM VAPOR/VENT AT UST'S TO NEW REMOTE VENT.

8 INSTALL NEW CONCRETE AT DISTURBED AREAS AT TANK SLAB FOR NEW PIPING PER SEI STANDARDS.

9 INSTALL NEW CONCRETE AT DISTURBED AREAS AT CANOPY SLAB FOR NEW PIPING PER SEI STANDARDS.

10 INSTALL NEW "U" BOLLARDS AT DISPENSERS AND REMOTE VENT TO SEI SPECIFICATIONS (TYP 7).

11 INSTALL (3) NEW INTERCOMS AT ADA COMPLIANT HEIGHT AT CANOPY COLUMNS.

12 INSTALL (2) NEW FIRE EXTINGUISHERS AT ADA COMPLIANT HEIGHT AT CANOPY COLUMNS.

13 INSTALL (3) NEW TRASH CAN/WASH BUCKET COMBO UNITS AT CANOPY COLUMNS.

14 EXISTING MAIN ID SIGN TO REMAIN WITH NEW LED RUL/ DSL PRICE SIGN UPGRADE BY OTHERS.

15 PAINT LED SIGNAGE FRAME, POLES, NEW BOLLARDS, CANOPY COLUMNS PER GULF BRANDING SPECIFICATIONS.

16 KEEP EXISTING VEEDER ROOT TLS350. UPDATE SOFTWARE AND HARDWARE AS REQUIRED.

17 ROUTE NEW CONDUIT TO NEW ELECTRICAL THROUGH EXTERIOR OF BUILDING, VERIFY LOCATION WITH SEI CONSTRUCTION MANAGER.

18 DEMOLITION-REMOVE EXISTING TANKS, TANK SLAB, EXISTING UST SYSTEM AND PIPING COMPLETELY. REMOVE ADDITIONAL PAVEMENT/SIDEWALKS AS REQUIRED TO FACILITATE OTHER REMOVALS AND INSTALLATIONS.

19 INSTALL (1) NEW E-STOP ON BUILDING EXTERIOR TO ADA HEIGHT COMPLIANCY.

20 INSTALL NEW 36'-0" X 43'-0" GULF BRANDED CANOPY FOR (3) NEW DISPENSERS.

21 INSTALL (1) NEW INTERIOR E-STOP BEHIND THE SALES COUNTER.

22 INSTALL (3) NEW SS DISPENSER ISLANDS.

23 INSTALL (3) PUMP TOPPERS AT DISPENSERS.

GENERAL NOTES

FUEL CONTRACTOR

1 FUEL GC TO WORK WITH SEI PM ON SCHEDULING. ANY CONFLICTS SHALL BE BROUGHT TO THE ATTENTION OF THE SEI PROJECT MANAGER.

2 FUEL GC RESPONSIBLE FOR ALL CONCRETE OVER TANKS AND PRODUCT PIPING (I.E. TANK SLAB AND DRIVE MATS). CONCRETE CHAIRS ARE BY SEI.

3 FUEL GC RESPONSIBLE FOR CANOPY FOOTINGS.

4 FUEL GC TO INSTALL CANOPY DRAINS (WHERE APPLICABLE) TO POINT OF CONNECTION WITHIN (10) FT OF DRIVE MATS.

5 FUEL EC TO INSTALL ALL FUEL RELATED ELECTRONICS (I.E. DATA BOXES, EDH UNIT, TURBINE RELAYS, ISOLATION RELAYS, ETC).

6 FUEL GC RESPONSIBLE FOR ALL ELECTRICAL CONDUITS, SEAL-OFFS, ELECTRICAL J-BOXES PER STATE, LOCAL, MANUFACTURERS AND SEI CODES AND SPECIFICATIONS.

7 FUEL EC TO PULL WIRE FOR CANOPY LIGHTING, INTERCOM, DISPENSERS, TURBINES AND MONITORING SYSTEM DEVICES.

8 FUEL EC TO MAKE ALL FINAL CONNECTIONS TO FUELING EQUIPMENT AND ELECTRONICS.

9 FUEL GC TO PULL TRADE PERMITS FOR FUELING WORK (AS REQUIRED).

10 FUEL GC TO "CALL FOR" AND "BE PRESENT FOR" ALL LOCAL REGULATOR INSPECTIONS AND RESPONSIBLE FOR SCHEDULING ON-SITE INSPECTIONS WITH APPROPRIATE SEI REPRESENTATIVE RELATED TO FUELING.

11 FUEL GC TO COORDINATE WITH TANKNOLOGY AND THE SEI CONSTRUCTION MANAGER FOR TESTING OF FUELING SYSTEM.

12 FUEL GC TO HAVE PERSONNEL ON SITE FOR TESTING.

13 FUEL GC RESPONSIBLE FOR CLOSE OUT PACKAGE PER 7-11 MATRIX.

KEY NOTES

1 EXISTING CONVENIENCE STORE

2 NEW CANOPY AND DISPENSERS

3 NEW UNDERGROUND FUEL STORAGE TANKS AND SLAB

4 NEW FUEL STORAGE TANK VENTS

5 EXISTING AIR-VAC MACHINE. MOVE LOCATION OF AIR-VAC MACHINE TO BE ON PROPERTY AS REQUIRED.

6 NEW E-STOP ON BUILDING EXTERIOR

7 EXISTING MAIN ID SIGN TO REMAIN WITH NEW LED RUL/ DSL PRICE SIGN UPGRADE

8 EXISTING VEEDER ROOT SITE MONITOR CONSOLE. FIELD VERIFY LOCATION

9 NEW INTERIOR E-STOP BEHIND SALES COUNTER. FIELD VERIFY LOCATION

NOTE:

TANKS TO BE BURIED AT A MINIMUM OF 4.17' AT THE LOWEST FINISH GRADE ELEVATION AND A MAXIMUM OF 5.67' AT THE HIGHEST FINISH GRADE ELEVATION ON THE TANK PAD. VENT PIPING MUST HAVE A MINIMUM SLOPE OF 1/8" PER FOOT FROM VENT SUMP TO THE TANKS. GC TO COORDINATE ANY BURIAL DEPTH DEVIATIONS WITH SEI PROJECT MANAGER.

NOTE:

THIS DRAWING IS TO BE USED AS A SCHEMATIC DRAWING. IT IS THE RESPONSIBILITY OF THE GC AND FUELING SUB-CONTRACTORS INSTALLING PRODUCT PIPING AND FUEL SYSTEM TO VERIFY EXISTING FIELD CONDITIONS. IF FIELD CONDITIONS VARY FROM DRAWING AS SHOWN OR INHIBIT INSTALLATION AS SHOWN CEASE WORK AND CONTACT SEI PROJECT MANAGER OR REPRESENTATIVE.

GC AND SUB-CONTRACTORS TO FOLLOW REMOVAL, AND INSTALLATION REQUIREMENTS OF FUELING SYSTEM COMPONENTS PER MANUFACTURER INSTRUCTIONS, LOCAL, FEDERAL, AND FIRE MARSHALL'S MANDATES, LAWS, AND REGULATIONS.

NOTE:
SLOPE PRODUCT PIPING 1/8" PER FOOT FROM LAST DISPENSER TO THE TANKS.

TANK BURIAL CHART – STORE (38912)

	COMPONENT	PREMIUM	REGULAR	VENT
A.	FINISH GRADE ELEV. AT BEGINNING OF RUN (FT):	303.50	303.50	305.77
B.	PIPE BURY (FT):	1.50	1.50	2.00
C.	ELEVATION OF PIPE AT BEGINNING OF RUN (A–B)	302.00	302.00	303.77
D.	PIPE LENGTH (LONGEST RUN) (FT):	70.00	57.00	131.00
E.	PIPING RUN FALL (FT) (D*1/8" PER FT):	0.73	0.59	1.36
F.	TOTAL CROSSOVERS/SWING JOINTS:	0.00	0.00	1.00
G.	CROSSOVER/SWING JOINT DEPTH (FT):	0.00	0.00	0.50
H.	ELEVATION AT END OF PIPE (FT) (C–E–G*F):	301.27	301.41	301.91
I.	ADD FOR EXTRACTOR TEE AT SUMP:	1.25	1.25	0.50
J.	TOP TANK ELEVATION (FT) (H–I):	300.02	300.16	301.41
K.	HIGHEST FINISH GRADE ELEVATION AT TANK SLAB (FT):	303.50	303.50	303.50
L.	MAX BURY DEPTH (K–J) (FT): MAX = 5.67'	3.48	3.34	2.09
M.	LOWEST FINISH GRADE ELEVATION AT TANKS (FT):	303.07	303.07	303.07
N.	MIN BURY DEPTH (M–J) (FT): MIN = 4.17'	3.05	2.91	1.66

TANK BURIAL DEPTH IS GOVERNED BY THE MINIMUM BURY DEPTH OF 4.17 FT.
THE TOP OF TANKS SHALL BE SET AT – 298.90 FT

Rev. #	Date	Description

Proto 12-01-2020

7-ELEVEN, INC.
3200 HACKBERRY ROAD, IRVING TEXAS 75063

7-ELEVEN #38912
3451 CROMPOND ROAD
YORKTOWN HEIGHTS, NEW YORK 10598

FUELING ARCHITECTURAL SITE PLAN

CORE STATES GROUP
CORESTATES ARCHITECTURE **NEW YORK** ENGINEERING P.C.
CERTIFICATE OF AUTHORIZATION
0026-22-CA-1

46 East Main Street
Suite 200
Somerville, NJ 08876
908.463.3700
corestatesgroup.com

Job#:	SEI-32507
Scale:	AS NOTED
Date:	08/24/21
Drawn By:	GJD
Checked By:	CGC

Documents prepared by Core States Group are to be used only for the specific project and specific use for which they are intended. Any extension of use to other projects, by owner or any other party without the expressed, written consent of Core States Group is done at the user's own risk. If used in a way other than as specifically intended, user will hold Core States Group harmless from all claims and losses.

STATE OF NEW YORK · DAVID M. LEIFER · 092655 · LICENSED PROFESSIONAL ENGINEER
11-16-2021

SHEET:
G0.1
FUELING - USA

PRINTED BY: GDELARCSA PRINT DATE: Nov 16, 2021 – 9:35am
DRAWING NAME: 38912 – G0.1 FUELING ARCHITECTURAL SITE PLAN.DWG

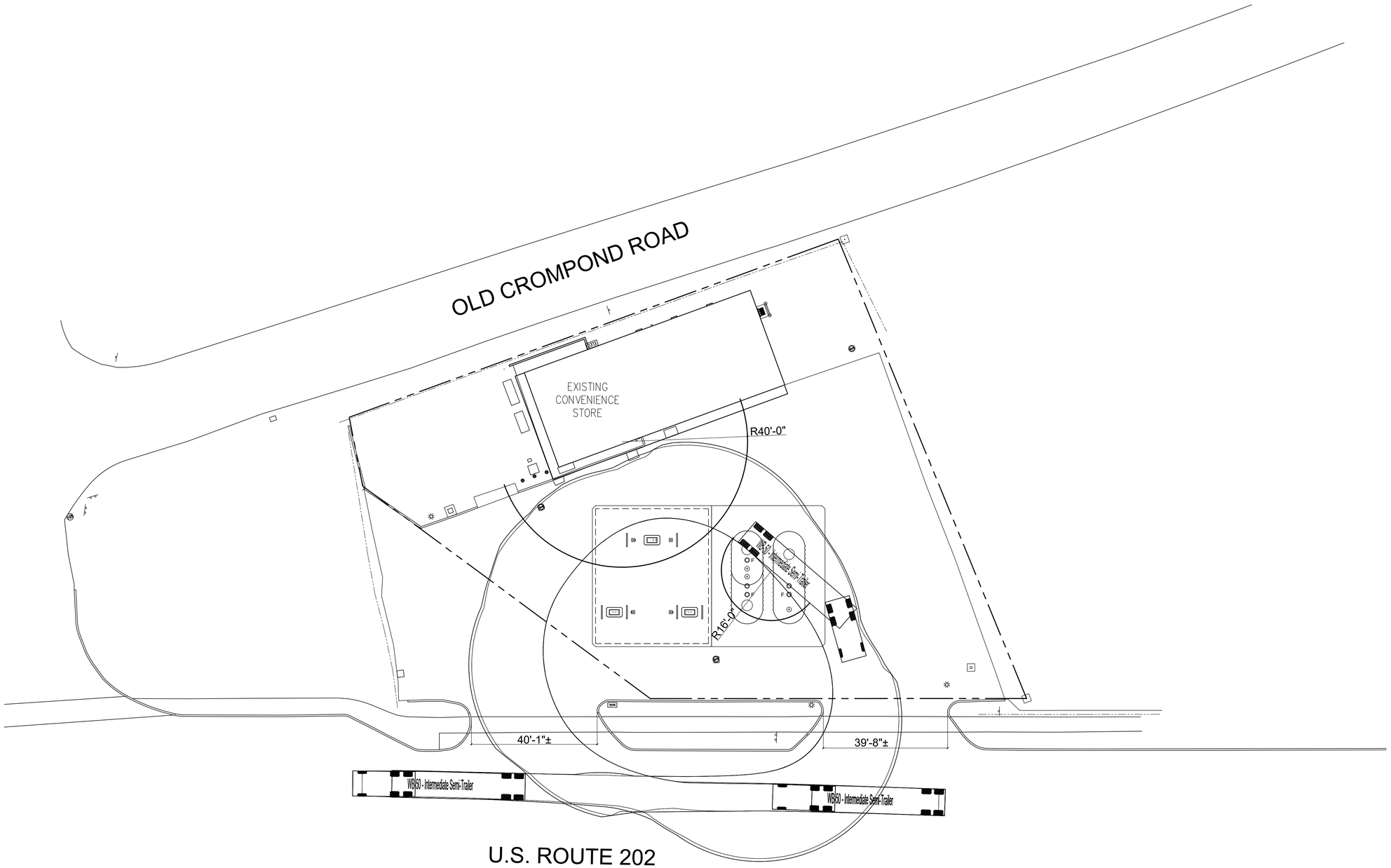

1 FUELING TRUCK ROUTE
1/16" = 1'-0"

Rev. #	Date	Description

Proto 12-01-2020

7-ELEVEN, INC.
3200 HACKBERRY ROAD, IRVING TEXAS 75063

7-ELEVEN #38912
3451 CROMPOND ROAD
YORKTOWN HEIGHTS, NEW YORK 10598

FUELING TRUCK ROUTE

CORE STATES GROUP
CORESTATES ARCHITECTURE | ENGINEERING P.C.
NEW YORK
CERTIFICATE OF AUTHORIZATION
#0026-22

46 East Main Street
Suite 200
Somerville, NJ 08876
908.462.3700
www.corestates.com

Job#:	SEI-32507
Scale:	AS NOTED
Date:	08/24/21
Drawn By:	GJD
Checked By:	CGC

Documents prepared by Core States Group are to be used only for the specific project and specific use for which they are intended. Any extension of use to other projects, by owner or any other party, without the expressed, written consent of Core States Group is done at the user's own risk. If used in a way not originally specifically intended, user will hold Core States Group harmless from all claims and losses.

STATE OF NEW YORK
DAVID M. LEIFER
092655
LICENSED PROFESSIONAL ENGINEER
11-16-2021

SHEET:
G0.2

FUELING - USA

PRINTED BY: GDELAROSA
DRAWING NAME: 38912 - G0.2 FUELING TRUCK ROUTE.DWG
PRINT DATE: Nov 16, 2021 - 9:39am

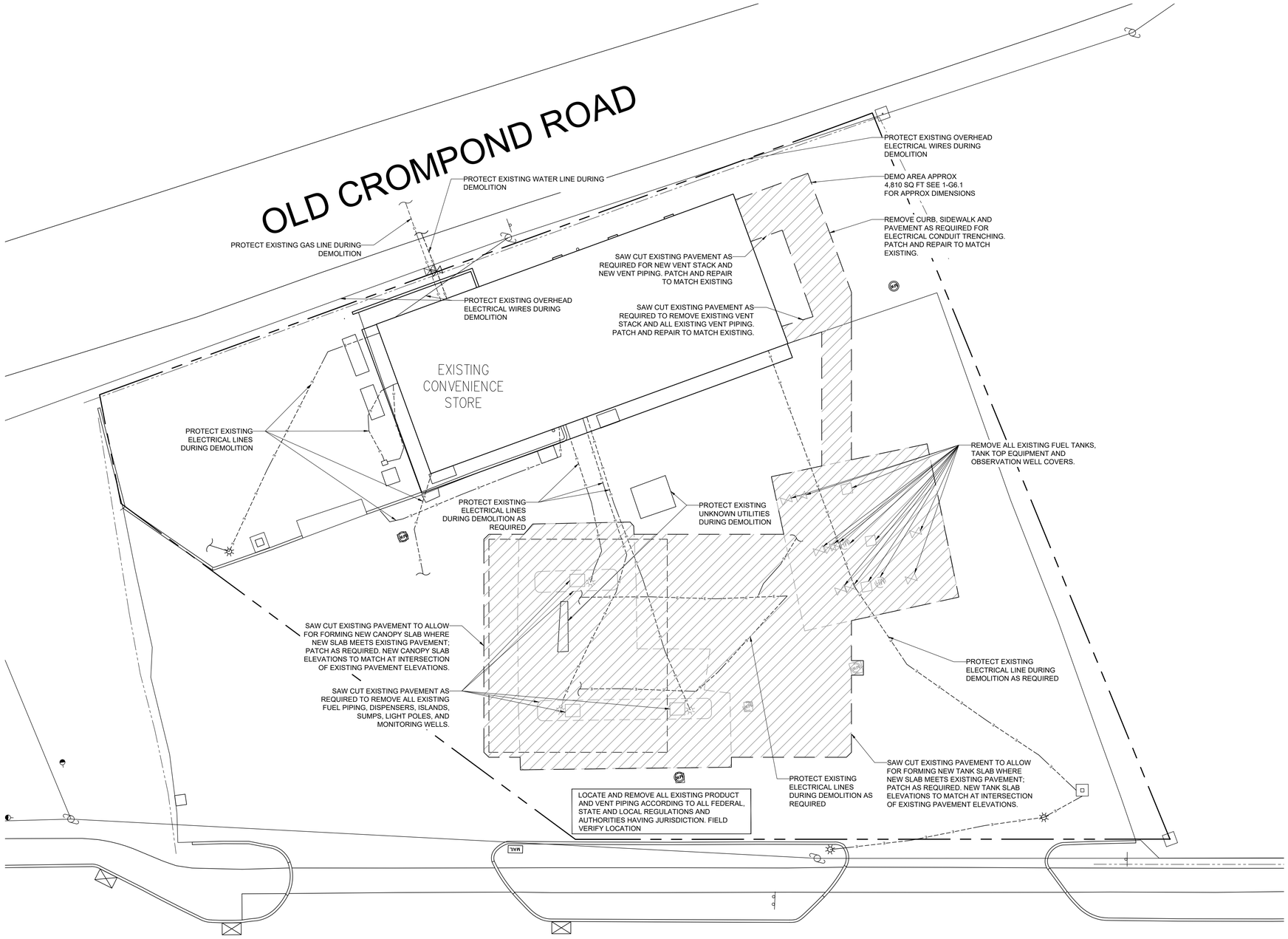

N

1 DEMO PLAN
3/32" = 1'-0"

GENERAL NOTES

1. CONTRACTOR TO CUT AND REMOVE CONCRETE AS NECESSARY TO REMOVE ALL EXISTING PIPING. LOCATION OF REMOVAL AT DISPENSER ISLANDS IS APPROXIMATE AND IS BASED ON AVAILABLE INFORMATION.

Know what's below. Call before you dig.

THE CONTRACTOR IS SPECIFICALLY CAUTIONED THAT THE LOCATION AND/OR ELEVATION OF EXISTING UTILITIES AS SHOWN ON THESE PLANS IS BASED ON DESIGN DRAWINGS, RECORDS OF THE VARIOUS UTILITY COMPANIES, AND WHERE POSSIBLE, MEASUREMENTS TAKEN IN THE FIELD. CORESTATES, INC. DOES NOT GUARANTEE THAT LOCATIONS SHOWN ARE EXACT. THE CONTRACTOR MUST CONTACT THE APPROPRIATE UTILITY COMPANIES AT LEAST 72 HOURS BEFORE ANY EXCAVATION TO REQUEST EXACT FIELD LOCATIONS OF UTILITIES.

Rev. #	Date	Description

Proto 12-01-2020

7-ELEVEN, INC.
3200 HACKBERRY ROAD, IRVING TEXAS 75063

7-ELEVEN #38912
3451 CROMPOND ROAD
YORKTOWN HEIGHTS, NEW YORK 10598

FUELING DEMOLITION PLAN

CORE STATES GROUP
CORESTATES ARCHITECTURE ENGINEERING P.C.
NEW YORK CERTIFICATE OF AUTHORIZATION No. 027577
46 East Main Street
Suite 201
Somerville, NJ 08876
908.442.7700
www.coresystems.com

Job#:	SEI-32507
Scale:	AS NOTED
Date:	08/24/21
Drawn By:	GJD
Checked By:	CGC

Documents prepared by Core States Group are to be used only for the specific project and purpose for which they were intended. Any extension of use to other projects, by owner or anyone else, without the expressed written consent of Core States Group is done at the user's own risk. If used in a way other than that specifically intended, user will hold Core States Group harmless from all claims and losses.

STATE OF NEW YORK
DAVID M. LEIFFER
092655
LICENSED PROFESSIONAL ENGINEER
11-16-2021

SHEET:
G0.3

FUELING - USA

PRINTED BY: GDELAROSA PRINT DATE: Nov 16, 2021 - 9:39am
DRAWING NAME: 38912 - G0.3 DEMO PLANLDWG

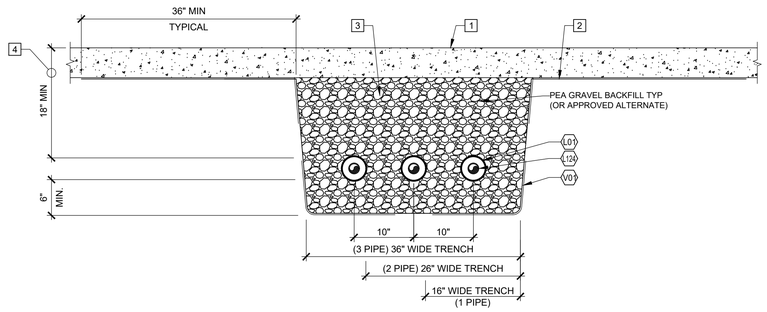

PRODUCT PIPING

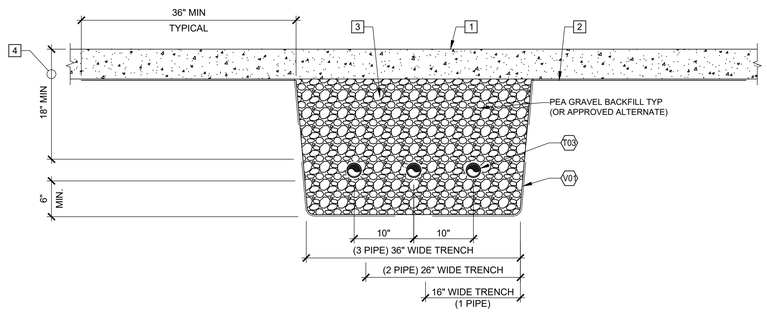

VENT PIPING

3 PIPING TRENCH SECTION
1"=1'-0"

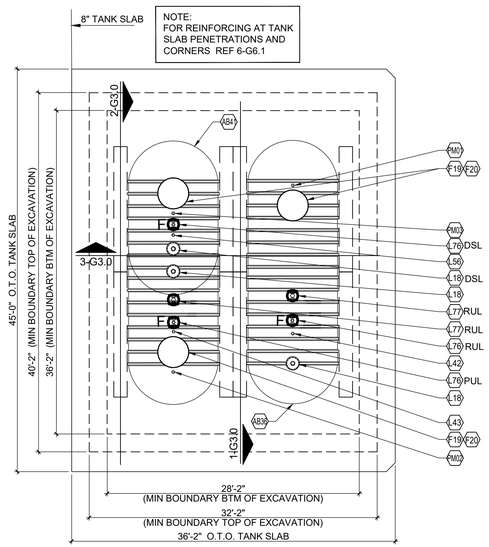

2 TANK SLAB PLAN
1/8"=1'-0"

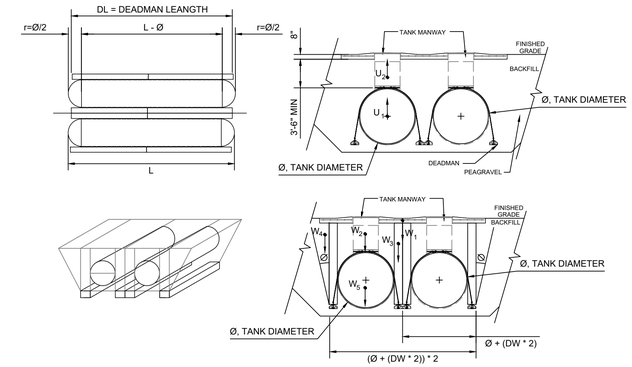

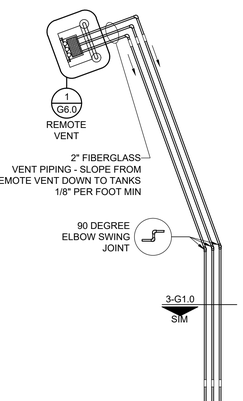

Underground Storage Tank Buoyancy Calculations for Fiberglass Tanks

Project #:	SEI.32507
Project Name:	Peekskill, NY (Store #38912)
Tank Manufacturer / Model:	Xerxes DW 10' 15K

Number of Tanks:	2	
Tank Dry Weight:	7000	lbs
Tank Volume:	15000	gallons
Tank Diameter *(ø)*:	10	feet
Tank Bury Depth:	4.17	feet
Tank Length *(L)*:	29.48	feet
Number of Sumps:	3	
Sump Diameter:	42	inches
Tank Slab Length:	45	feet
Tank Slab Width:	36.17	feet
Tank Slab Thickness:	8	inches
Deadman Length *(DL)*:	28	feet
Deadman Width *(DW)*:	18	inches
Deadman Height:	8.75	inches

Assumptions

100% saturation to finished grade

water =	62.4 lb/CF
submerged concrete =	87.6 lb/CF
submerged aggregate =	57.6 lb/CF

Tank & Sump(s) Uplift

Tank

U1 = 30000 gal / 7.49 gal/CF x 62.4 lb/CF = 249,933 lbs

Sumps

U2 = 120.3 CF x 62.4 lb/CF = 7,507 lbs

Total Uplift

U= ∑ Ui = **257,440 lbs UP**

Dead Weights for Hold Down

Concrete Slab

W1 = 1085.1 CF x 87.6 lb/CF = 95,055 lbs

Backfill Above Tank

W2 = 2,645 CF x 57.6 lb/CF = 152,367 lbs

Gravel Column Above Deadman (2 deadmen per tank)

W3 = 2268.56 CF x 57.6 lb/CF = 130,669 lbs

Soil Wedge Above Deadman (2 total)

W4 = 245.1409 CF x 57.6 lb/CF = 14,120 lbs

Concrete Deadman (2 deadmen per tank)

W4 = 122.5 CF x 87.6 lb/CF = 10731 lbs

Dry Weight of Tank

W5 = 14,000 lbs

Total Weight

W= ∑ Wi = **416,941 lbs DOWN**

Net Force

Fnet = ∑ Wi - ∑ Ui = **159,502 DOWN**

Factor of Safety

F.S. = 416,941 lbs / 257,440 lbs .= 1.62 PASS

FLOW RATE (RUL)	FLOW RATE (PUL)	FLOW RATE (DSL)
2 NOZZLES - 10 GPM	3 NOZZLES - 10 GPM	3 NOZZLES - 10 GPM
5 NOZZLES - 8 GPM	5 NOZZLES - 8 GPM	4 NOZZLES - 9 GPM
6 NOZZLES - 7 GPM	6 NOZZLES - 7 GPM	

STORE SIDE

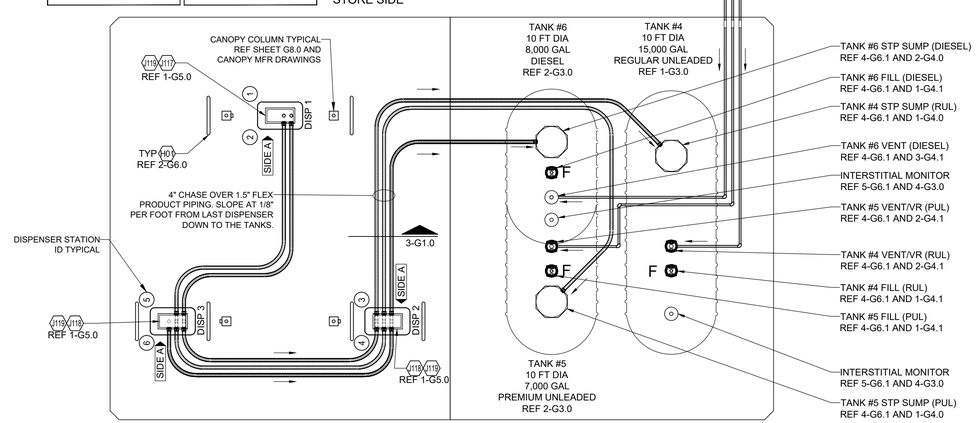

NOTE:
REF 1-G6.1 FOR DIMENSIONS AND
LOCATIONS OF DISPENSERS.

STREET SIDE

VENT PIPING DESIGN BASED ON 25' LENGTHS

1 FUEL PIPING PLAN
1/8"=1'-0"

GENERAL NOTES

1. ALL CONSTRUCTION SHALL MEET COUNTY STANDARDS. CONTRACTOR TO SECURE ENTIRE CONSTRUCTION AREA WITH CHAIN LINK FENCING DURING CONSTRUCTION PERIOD.
2. THE CONTRACTOR SHALL IMMEDIATELY NOTIFY ENGINEER OF ANY DIFFERENCES BETWEEN THE ACTUAL FIELD CONDITIONS AND THE PLANS BEFORE PROCEEDING WITH CONSTRUCTION.
3. FUEL CONTRACTOR SHALL BE RESPONSIBLE FOR THE INTEGRITY OF THE PIPING SYSTEM DURING CANOPY ERECTION AND CONCRETE FLATWORK INSTALLATION.
4. AFTER COMPLETING INSTALLATION OF DISPENSERS, THE FUEL CONTRACTOR IS TO INSTALL BRIGHT ORANGE CONSTRUCTION FENCE AROUND ENTIRE DISPENSER.
5. FUEL CONTRACTOR IS TO BE AWARE THAT ON THE DAY THE GASOLINE SYSTEM IS PUT INTO SERVICE, THE FUEL CONTRACTOR AND A GILBARCO AUTHORIZED SERVICE CONTRACTOR MUST BE ON SITE ONE (1) HOUR PRIOR TO STARTUP AND MUST REMAIN ON SITE THREE (3) ADDITIONAL HOURS FOR A TOTAL OF FOUR (4) HOURS. ANY COSTS INCURRED OVER FOUR (4) HOURS DUE TO FUELING SYSTEM ISSUES, SHOULD BE BILLED AS A CHANGE ORDER.

KEY NOTES

1. 6" CONCRETE SLAB AT FUELING CANOPY. REF G0.1 FOR TOS ELEVATIONS.
2. GEOTECH FABRIC MATERIAL TO EXTEND 36" PAST EACH SIDE OF PIPING TRENCH. ALL GEOTECH FABRIC MATERIAL SHALL BE PINNED PRIOR TO BACKFILLING. METHOD OF PINNING FABRIC AT TOP OF EXCAVATION TO BE APPROVED BY THE 7-ELEVEN CONSTRUCTION MANAGER.
3. PIPING TRENCHES SHALL BE DUG IN SUCH A MANNER THAT THE TRENCH WIDTH IS EQUAL TO AT LEAST TWICE WIDTH OF ALL PIPING CONTAINED WITHIN. MAINTAIN A MINIMUM OF 4" (10cm) CLEAR DISTANCE BETWEEN PIPING POSITIONED IN THE TRENCH AND 6" WHERE PIPING CROSSES OVER EACH OTHER. THE BOTTOM OF THE TRENCH SHALL BE AS UNIFORM AS POSSIBLE TO ELIMINATE HIGH SPOTS AND ENSURING AN EVEN LAYER OF BEDDING MATERIAL UNDER THE PIPE. REMOVE ALL SHARP ROCKS AND DEBRIS FROM THE TRENCH BOTTOM BEFORE BEDDING MATERIAL IS INSTALLED.
4. SITE CONDITIONS MAY CAUSE VARIATIONS WHICH MUST BE APPROVED BY 7-ELEVEN AND MANUFACTURER. PIPING BURIAL DEPTHS LESS THAN 18" REQUIRES 7-ELEVEN APPROVAL.

Rev. #	Date	Description

Proto 12-01-2020

7-ELEVEN, INC.
3200 HACKBERRY ROAD, IRVING TEXAS 75063

7-ELEVEN #38912
3451 CROMPOND ROAD
YORKTOWN HEIGHTS, NEW YORK 10598

FUELING PIPING AND TANK PLAN

CORE STATES GROUP
CORESTATES ARCHITECTURE, ENGINEERING P.C.
CERTIFICATE OF AUTHORIZATION
#0026597
46 East Main Street
Suite 2B
Bridgewater, NJ 08876
908.400.3700
www.corestates.com

Job#:	SEI-32507
Scale:	AS NOTED
Date:	08/24/21
Drawn By:	GJD
Checked By:	CGC

Documents prepared by Core States Group are to be used only for the specific project and specific use for which they are intended. Any extension of use to other projects, by owner or another party, without the express, written consent of Core States Group is done at the user's own risk. If used in a way other than that specifically intended, user will hold Core States Group harmless from all claims and losses.

STATE OF NEW YORK · DAVID M LEIFER · 092655 · LICENSED PROFESSIONAL ENGINEER
11-16-2021

SHEET:
G1.0
FUELING - USA

PRINTED BY: GDELAROSA PRINT DATE: Nov 16, 2021 - 9:40am
DRAWING NAME: 38912 - G1.0 FUELING PIPING AND TANK PLAN.DWG

KEY NOTES

1. CONCRETE SLAB. REF G0.1 FOR TOS ELEVATIONS. ALL MANHOLES WITHIN THE TANK SLAB AREA TO BE RAISED 1" ABOVE THE NORMAL GRADE OF CONCRETE. SLOPE CONCRETE TO MANHOLES 1/4" PER FT. CROWN CONCRETE AS TO NOT INHIBIT WATER DRAINAGE OFF THE TANK SLAB (NO POOLING).
2. GEOTECH FABRIC MATERIAL TO EXTEND 60" MINIMUM PAST THE TANK HOLE EXCAVATION. ALL GEOTECH FABRIC MATERIAL TO BE PINNED PRIOR TO BACKFILLING. METHOD OF PINNING FABRIC AT TOP OF EXCAVATION TO BE APPROVED BY THE 7-ELEVEN CONSTRUCTION MGR.
3. MOH STRAP ANCHOR SYSTEM SUPPLIED BY TANK MANUFACTURER. PLACE DEADMEN PER MANUFACTURER'S INSTALLATION INSTRUCTIONS.
4. FOR SLOPE, FOLLOW CURRENT OSHA REGULATIONS. IF SHEET PILES ARE UTILIZED, PROVIDE 42" MINIMUM CLEARANCE BETWEEN NEW TANKS AND SHORING.
5. BURIAL DEPTH GREATER THAN 5'-8" REQUIRES 7-ELEVEN AND MANUFACTURER'S APPROVAL.
6. UNDISTURBED SOIL OR COMPACTED BACK FILL NOT LESS THAN 95% OF MODIFIED PROCTOR DESCRITY (AASHTO-T-180).

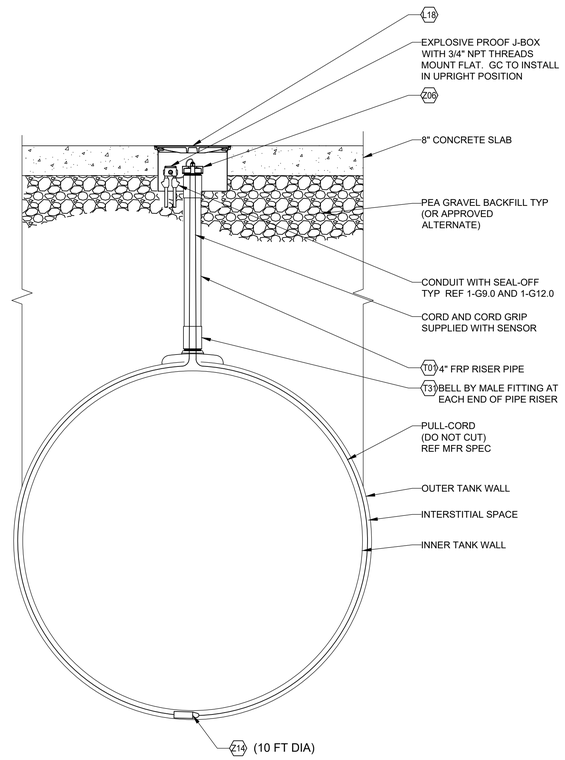

4 ANNULAR SPACE RISER AND SENSOR SECTION
1/2"=1'-0"

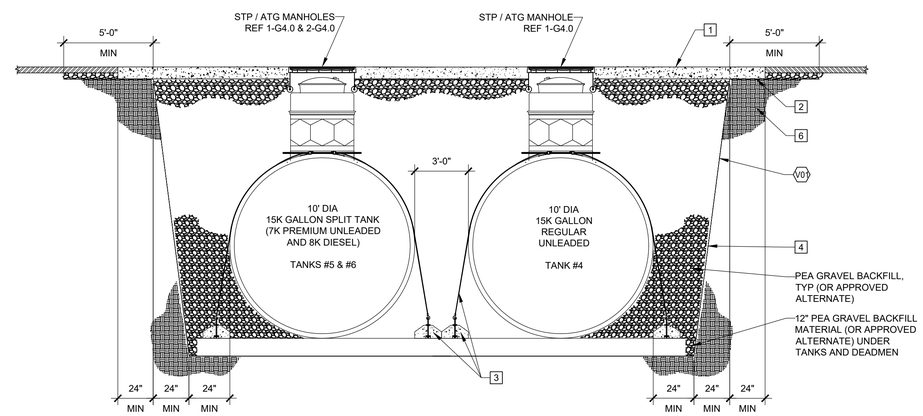

3 10' DIA UNDERGROUND STORAGE TANK SECTION
1/4"=1'-0"

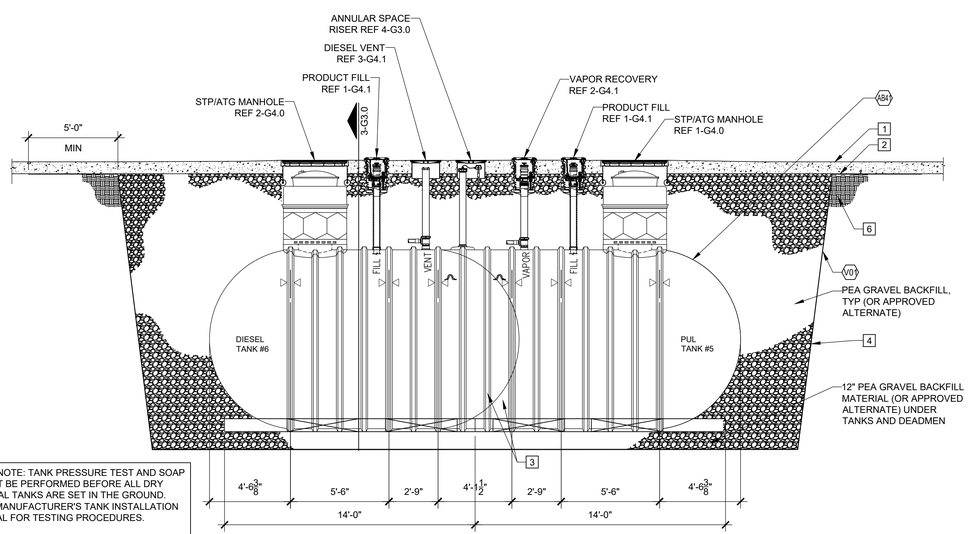

CONTRACTOR NOTE: TANK PRESSURE TEST AND SOAP TEST MUST BE PERFORMED BEFORE ALL DRY INTERSTITIAL TANKS ARE SET IN THE GROUND. REFERENCE MANUFACTURER'S TANK INSTALLATION MANUAL FOR TESTING PROCEDURES.

WARNING: DO NOT PERFORM A PRESSURE TEST ON A TANK WITH WET INTERSTITIAL.

2 10' DIA 20,000 GALLON SPLIT TANK SECTION
1/4"=1'-0"

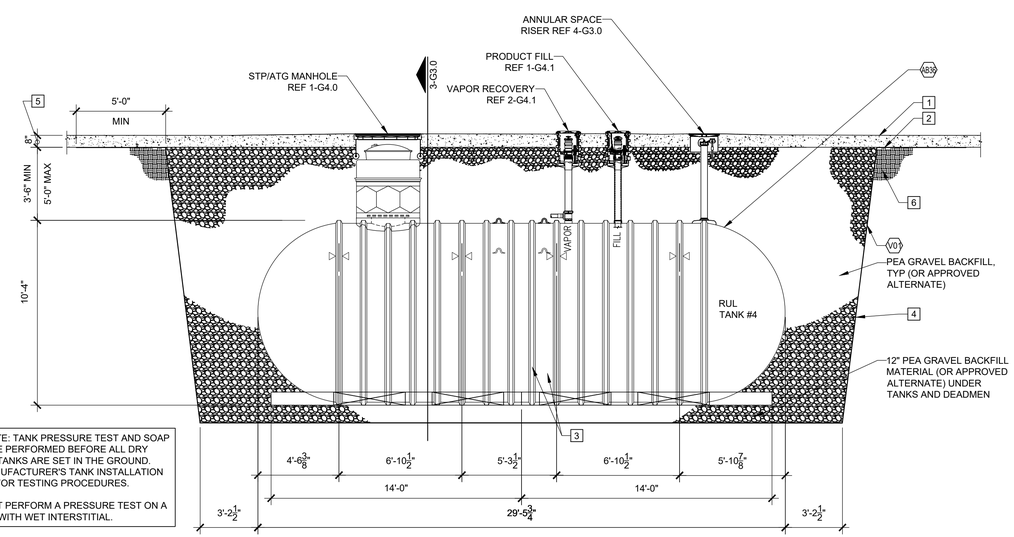

CONTRACTOR NOTE: TANK PRESSURE TEST AND SOAP TEST MUST BE PERFORMED BEFORE ALL DRY INTERSTITIAL TANKS ARE SET IN THE GROUND. REFERENCE MANUFACTURER'S TANK INSTALLATION MANUAL FOR TESTING PROCEDURES.

WARNING: DO NOT PERFORM A PRESSURE TEST ON A TANK WITH WET INTERSTITIAL.

1 10' DIA 20,000 GALLON TANK SECTION
1/4"=1'-0"

Rev. #	Date	Description

Proto 12-01-2020

7-ELEVEN, INC.
3200 HACKBERRY ROAD, IRVING TEXAS 75063

7-ELEVEN #38912
3451 CROMPOND ROAD
YORKTOWN HEIGHTS, NEW YORK 10598

TANK SECTIONS

CORE STATES GROUP
CORESTATES ARCHITECTURE AND ENGINEERING P.C. NEW YORK
CERTIFICATE OF AUTHORIZATION #0026797
46 East Main Street Suite 206 Somerville, NJ 08876 908.462.9700 corestatesgroup.com

Job#:	SEI-32507
Scale:	AS NOTED
Date:	08/24/21
Drawn By:	GJD
Checked By:	CGC

Documents prepared by Core States Group are to be used only for the specific project and purpose for which they were intended. Any extension of use to other projects, by owner or any other party, without written or expressed, written consent of Core States Group is done at the user's own risk. If used in a way other than specifically intended, user will hold Core States Group harmless from all claims and losses.

STATE OF NEW YORK · DAVID M. LEIFER · 092655 · LICENSED PROFESSIONAL ENGINEER
11-16-2021

SHEET:
G3.0
FUELING - USA

PRINTED BY: GDELARGSA PRINT DATE: Nov 16, 2021 - 9:40am
DRAWING NAME: 38912 - G3.0 TANK SECTIONS.DWG

KEY NOTES

1. ELECTRICAL CONDUIT(S) TO ENTER SUMP 2" MIN ABOVE HIGHEST PRODUCT PENETRATION.
2. LOCATE ELECTRICAL JUNCTION BOX IN UPWARD POSITION AT HIGHEST LOCATION IN SUMP RISER FOR EASY ACCESS FROM ABOVE.
3. SUMP SENSOR TO REST AT LOWEST POINT OF SUMP ENCLOSURE ON PRODUCT PIPING SIDE OF SUMP. TANK CONTRACTOR TO SUPPLY ALL BRACKETS AND CLAMPS FOR 2-POINT MOUNTING OF THE 2" FRP SLEEVE.
4. SET MANHOLE COVERS 1" ABOVE THE FINISH GRADE AND SLOPE CONCRETE AWAY FROM MANWAY COVERS AT 2% GRADE.
5. POSITION BALL VALVE FOR UNOBSTRUCTED USE OF SHUT-OFF HANDLE.
6. STP POWER CONDUITS MUST BE RUN IN SEPARATE RACEWAY. ENTIRE WIRING RUN MUST BE IN RIGID PVC COATED GALVANIZED STEEL CONDUIT. USE ONLY ROB ROY CONDUIT TYPES "PERMA-COAT", "PLASTI-BOND" OR "KORKAP", NO PVC OR RNC CONDUIT ALLOWED.
7. USE ONLY ROB ROY CONDUIT TYPES "PERMA-COAT", "PLASTI-BOND" OR "KORKAP" ELECTRICAL CONDUITS AT FIBERGLASS TANK SUMPS OR WHERE BRAVO F-17-RR OR F-10-RR ENTRY FITTINGS ARE CALLED OUT.

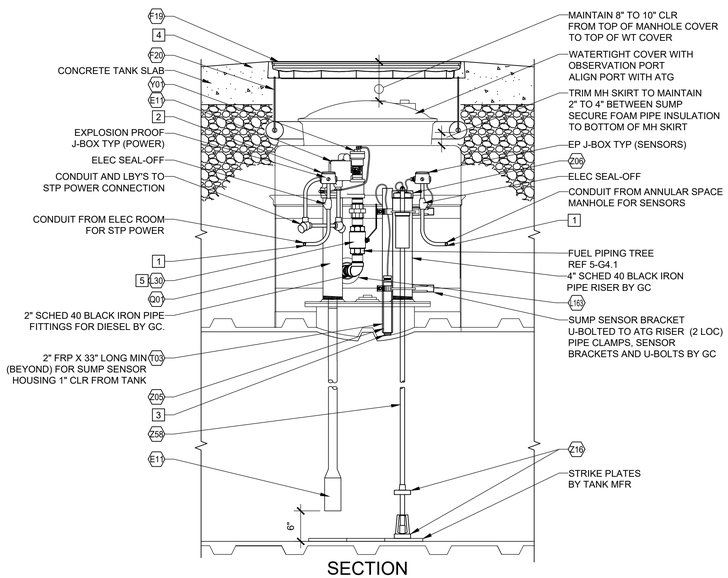

SECTION

ROTATE VIEW AS REQUIRED FOR FIELD CONDITION

PIPING PENETRATIONS INTO SUMP ARE SHOWN FOR REFERENCE ONLY - COORDINATE LOCATIONS WITH SHEET G0.1 AND FIELD CONDITIONS

ELECTRICAL PENETRATIONS INTO SUMP ARE SHOWN FOR REFERENCE ONLY - COORDINATE LOCATIONS WITH SHEET G9.0 AND FIELD CONDITIONS

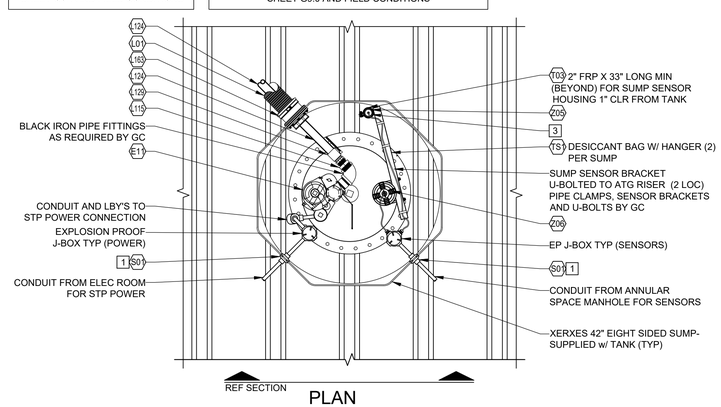

PLAN

2 DIESEL STP SUMP DETAILS

3/4"=1'-0"

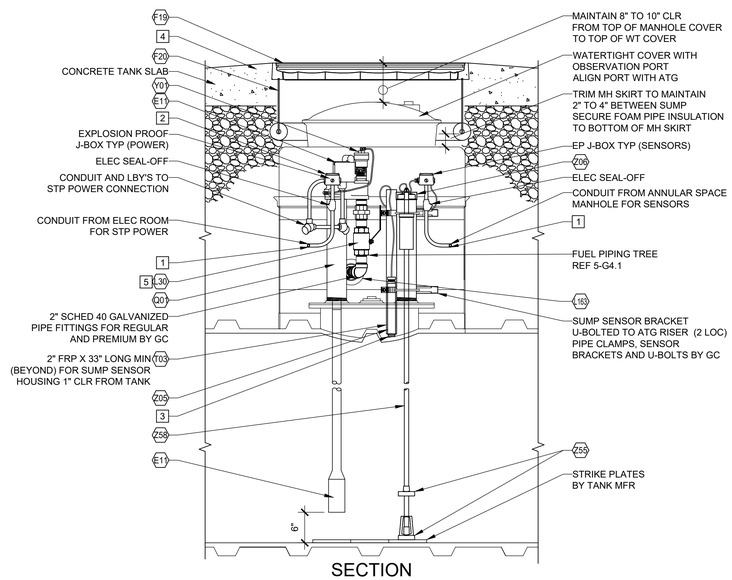

SECTION

ROTATE VIEW AS REQUIRED FOR FIELD CONDITION

PIPING PENETRATIONS INTO SUMP ARE SHOWN FOR REFERENCE ONLY - COORDINATE LOCATIONS WITH SHEET G0.1 AND FIELD CONDITIONS

ELECTRICAL PENETRATIONS INTO SUMP ARE SHOWN FOR REFERENCE ONLY - COORDINATE LOCATIONS WITH SHEET G9.0 AND FIELD CONDITIONS

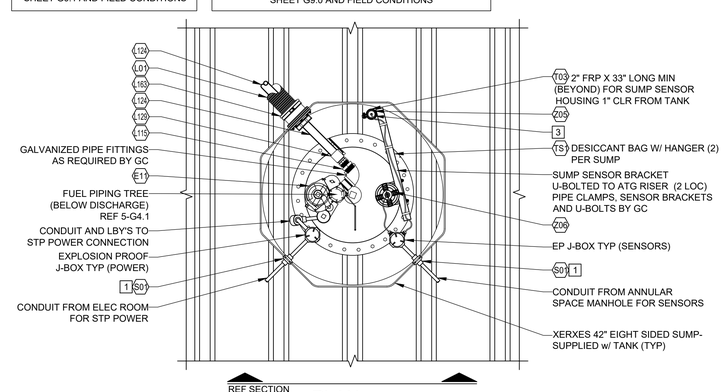

PLAN

1 REGULAR AND PREMIUM STP SUMP DETAILS

3/4"=1'-0"

Rev. #	Date	Description

Proto 12-01-2020

7-ELEVEN, INC.
3200 HACKBERRY ROAD, IRVING TEXAS 75063

7-ELEVEN #38912
3451 CROMPOND ROAD
YORKTOWN HEIGHTS, NEW YORK 10598

TANK SUMP DETAILS
SINGLE OUTPUT

CORE STATES GROUP
CORESTATES ARCHITECTURE ENGINEERING P.C.
NEW YORK
CERTIFICATE OF AUTHORIZATION
NO. 0026767
46 East Main Street
Suite 201
Somerville, NJ 08876
908.462.7000
www.coresstates.com

Job#:	SEI-32507
Scale:	AS NOTED
Date:	08/24/21
Drawn By:	GJD
Checked By:	CGC

Documents prepared by Core States Group are to be used only for the specific project and purpose for which they are intended. Any extension of use to other projects, by owner or another party, without written expressed, written consent of Core States Group is done at the user's own risk. If used in a manner not originally intended, user will hold Core States Group harmless from all claims and losses.

STATE OF NEW YORK · DAVID M. LEIFER · 092655 · LICENSED PROFESSIONAL ENGINEER

11-16-2021

SHEET:
G4.0

FUELING - USA S/O

PRINTED BY: GDELAROSA
DRAWING NAME: 38912 - G4.0 TANK SUMP DETAILS.DWG PRINT DATE: Nov 16, 2021 - 9:41am

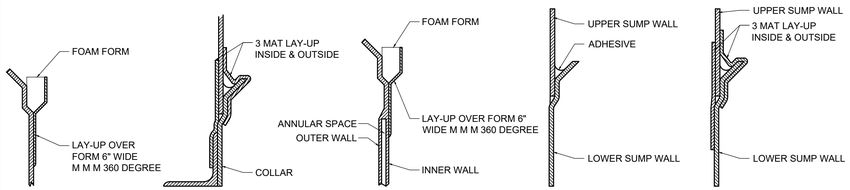

LAY-UP SAMPLES SHOWN ARE FOR REFERENCE ONLY. REFER TO MANUFACTURER'S INSTALLATION INSTRUCTIONS FOR SPECIFIC LAY-UP MATERIALS AND METHODS.

6 TANK SUMP LAYUP DETAILS
NTS

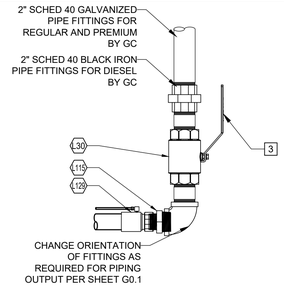

SINGLE
PRODUCT OUTPUT

5 FUEL PIPING TREE DETAILS
1 1/2"=1'-0"

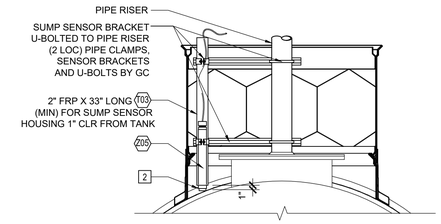

4 SUMP SENSOR AND SENSOR BRACKET DETAIL
3/4"=1'-0"

KEY NOTES

1. CONCRETE SLAB. REF G0.1 FOR TOS ELEVATIONS. ALL MANHOLES COVERS WITHIN THE TANK SLAB AREA ARE TO BE SET 1" ABOVE THE FINISH GRADE AND SLOPE CONCRETE AWAY FROM MANWAY COVERS AT 2% GRADE. CROWN CONCRETE AS TO NOT INHIBIT WATER DRAINAGE OFF THE TANK SLAB (NO POOLING).
2. SUMP SENSOR TO REST AT LOWEST POINT OF SUMP ENCLOSURE ON PRODUCT PIPING SIDE OF SUMP. TANK CONTRACTOR TO SUPPLY UNISTRUT BRACKETS, PIPE CLAMPS AND 2" FRP SLEEVE FOR 2-POINT MOUNTING OF THE SLEEVE.
3. POSITION BALL VALVE FOR UNOBSTRUCTED USE OF SHUT-OFF HANDLE.
4. OVERFILL PREVENTION VALVE INSTALLED PER MFR'S SPECIFICATIONS. SET OVERFILL DEVICE FOR RESTRICTION OF FLOW AT OR BELOW 90% TANK CAPACITY AND POSITIVE SHUT-OFF AT 95% TANK CAPACITY TO MEET NFPA 30 REQUIREMENTS

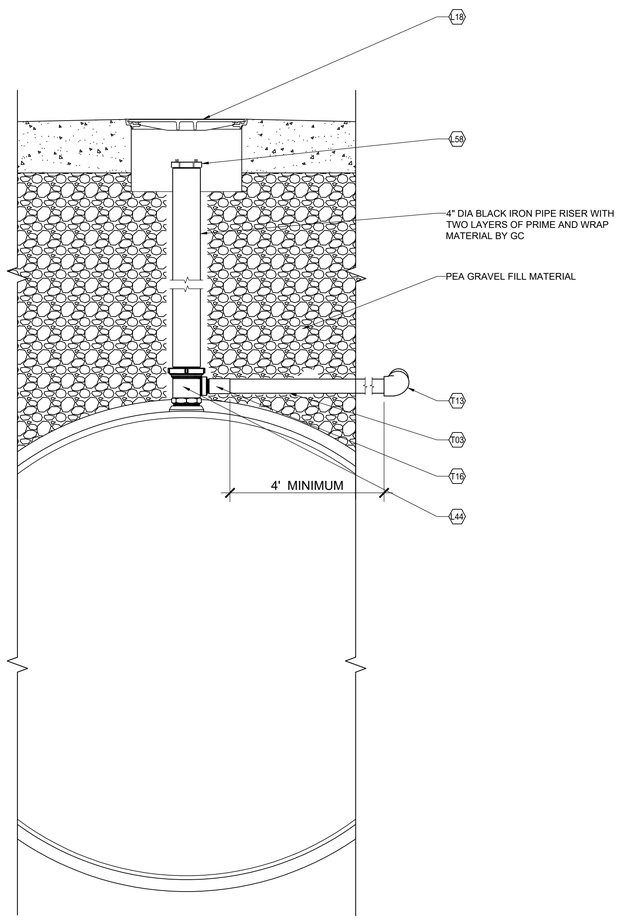

3 DIESEL VENT DETAIL
1"=1'-0"

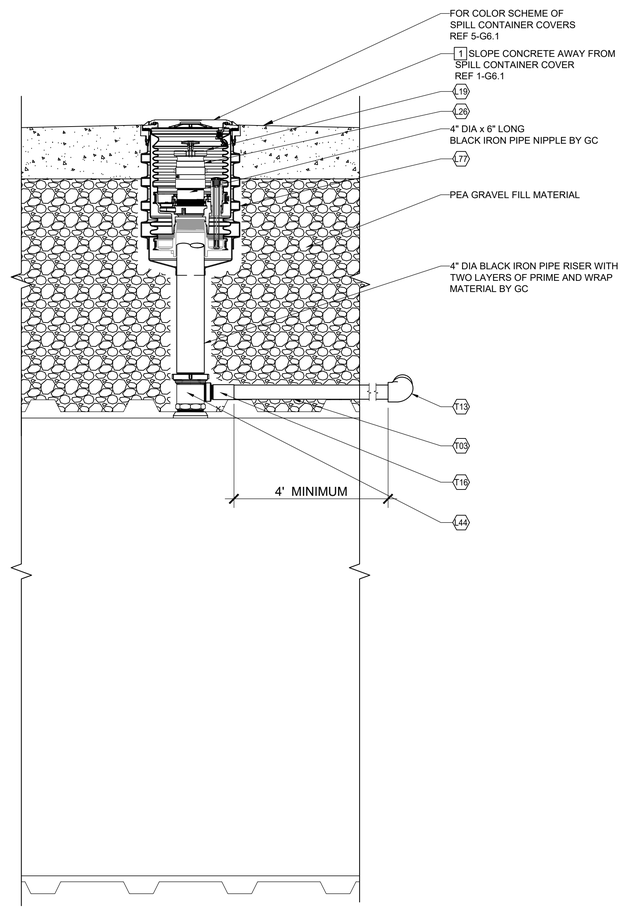

2 RUL / PUL VENT/VAPOR DETAIL
1"=1'-0"

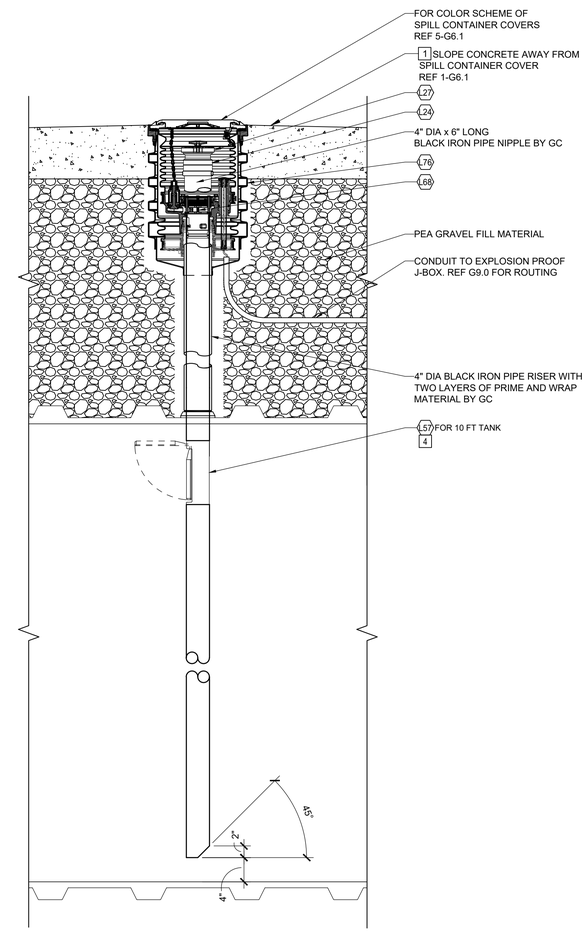

1 FUEL FILL CONTAINER DETAIL
1"=1'-0"

Rev. #	Date	Description

Proto 12-01-2020

7-ELEVEN, INC.
3200 HACKBERRY ROAD, IRVING TEXAS 75063

7-ELEVEN #38912
3451 CROMPOND ROAD
YORKTOWN HEIGHTS, NEW YORK 10598

TANK SUMP DETAILS

CORE STATES GROUP
CORESTATES ARCHITECTURE ENGINEERING P.C.
NEW YORK
CERTIFICATE OF AUTHORIZATION
0020-21-27-00544

46 East Main Street
Suite 201
Clark, New Jersey, NJ 07066
908.463.3700
corestatesgroup.com

Job#:	SEI-32507
Scale:	AS NOTED
Date:	08/24/21
Drawn By:	GJD
Checked By:	CGC

Documents prepared by Core States Group are to be used only for the specific project and specific use for which they are intended. Any extension of use to other projects, by owner or another party, without the expressed, written consent of Core States Group is done at the user's own risk. If used in a way other than that specifically intended, user will hold Core States Group harmless from all claims and losses.

STATE OF NEW YORK · DAVID M. LEIFER · 092655 · LICENSED PROFESSIONAL ENGINEER
11-16-2021

SHEET:
G4.1

FUELING - USA

PRINTED BY: GDELARCSA PRINT DATE: Nov 16, 2021 - 9:42am
DRAWING NAME: 38912 - G4.1 TANK SUMP DETAILS.DWG

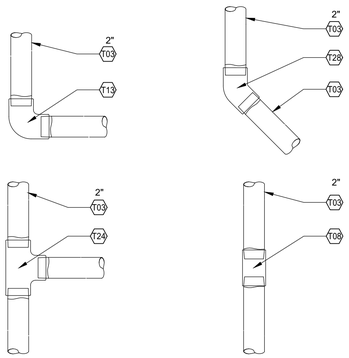

4 PIPING CONNECTIONS
1" = 1'-0"

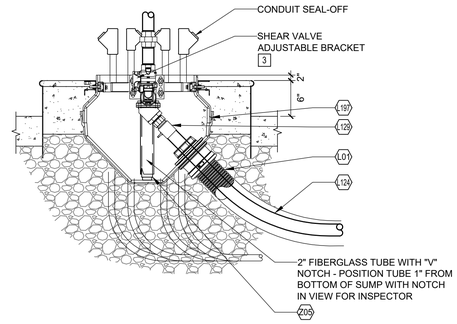

TERMINATING

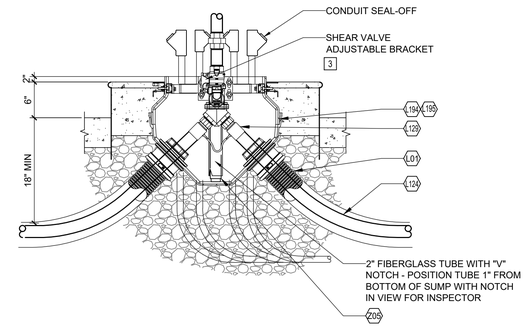

JUNCTION

3 DISPENSER SUMP SECTION
1" = 1'-0"

GENERAL NOTES

1. AFTER ALL UNDERGROUND PIPING AND ELECTRIC CONDUITS ARE INSTALLED AND DURING EXCAVATION, BACKFILLING, AND CONCRETE POURING; A CONTINUOUS HYDROSTATIC TEST SHALL BE PERFORMED ON ALL SUMPS AND SPILL BUCKETS TO ENSURE TIGHTNESS AND PROPER INSTALLATION.
2. SUMP TO BE CLEANED OF DEBRIS AND DRIED AFTER TESTING.

KEY NOTES

1. SOURCE NORTH AMERICA TO SUPPLY U-BOLTS TO SECURE PIPING TO CROSS BRACKETS SUPPLIED BY GILBARCO.
2. **CRITICAL - MUST HAVE 2" RAIN LIP ABOVE INTEGRAL RAIN LIP FRAME.**
3. SHEAR SECTIONS OF SHEAR VALVES SHALL BE MOUNTED FLUSH WITH TOP OF PAVEMENT.
4. HOSE RETRACTOR REQUIRES FIELD MODIFICATION. REF MANUFACTURER'S INSTALLATION INSTRUCTIONS FOR SPECIFIC USE.
5. CROWN CONCRETE AT BASE OF ISLANDS TO PROMOTE DRAINAGE AND INHIBIT POOLING AROUND DISPENSER ISLANDS.

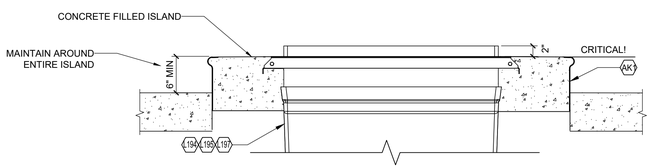

5 DISPENSER SUMP ELEVATIONS
1" = 1'-0"

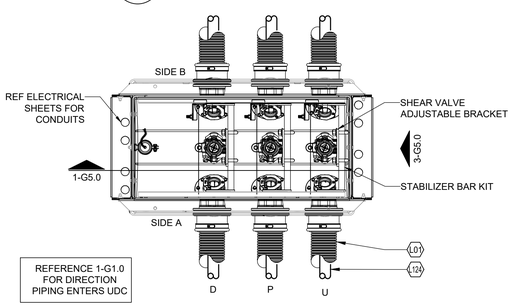

3+1 DISPENSER

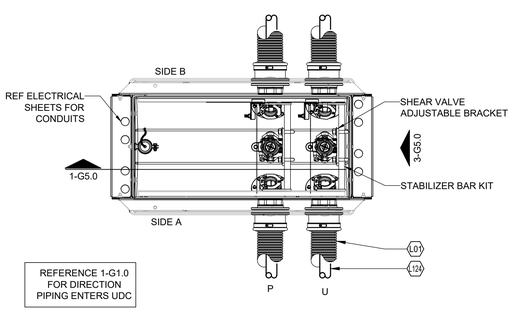

3+0 DISPENSER

2 DISPENSER SUMP – PLAN VIEWS
1" = 1'-0"

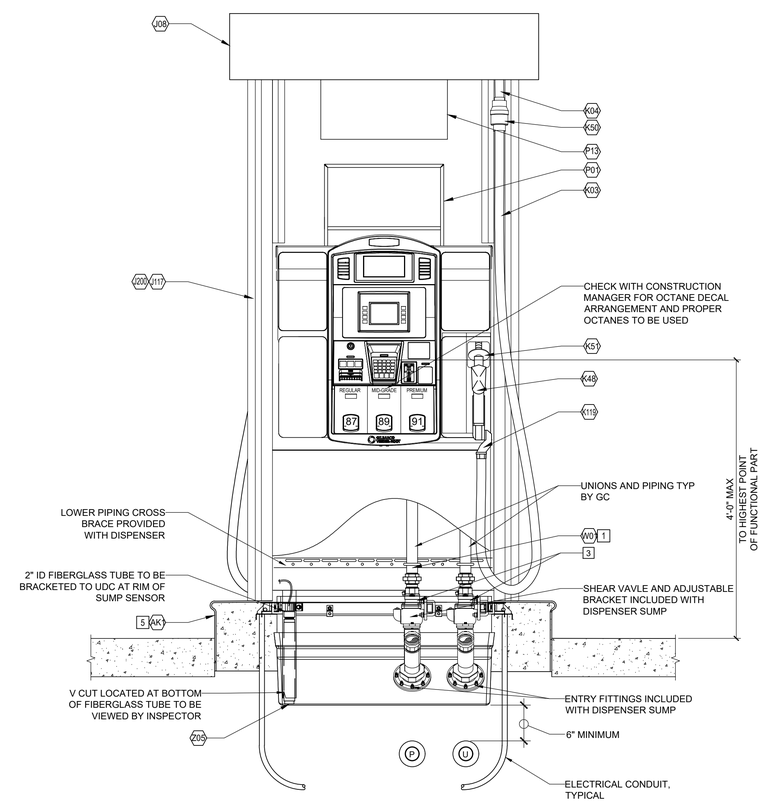

3+0 DISPENSER

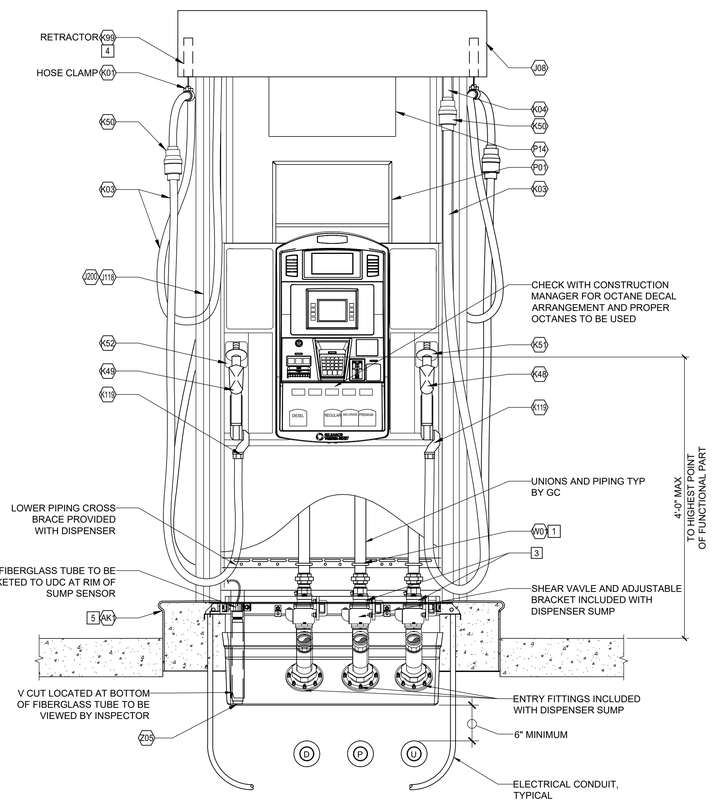

3+1 DISPENSER

1 GILBARCO ENCORE 700S DISPENSER
1" = 1'-0"

Rev. #	Date	Description

Proto 12-01-2020

7-ELEVEN, INC.
3200 HACKBERRY ROAD, IRVING TEXAS 75063

7-ELEVEN #38912
3451 CROMPOND ROAD
YORKTOWN HEIGHTS, NEW YORK 10598

DISPENSER AND SUMP DETAILS

CORE STATES GROUP
CORESTATES ARCHITECTURE, ENGINEERING P.C.
NEW YORK
CERTIFICATE OF AUTHORIZATION
0026375-00-AA
46 East Main Street
Suite 200
Plainfield, NJ 07060
908.462.7700
coresystemsgroup.com

Job#:	SEI-32507
Scale:	AS NOTED
Date:	08/24/21
Drawn By:	GJD
Checked By:	CGC

Documents prepared by Core States Group are to be used only for the specific project and site for which they were prepared and intended. Any extension of use to other projects, by owner or others, without written, signed, expressed, written consent of Core States Group is done at the user's own risk. If used in a manner other than that specifically intended, user will hold Core States Group harmless from all claims and losses.

STATE OF NEW YORK
DAVID M. LEIFER
092655
LICENSED PROFESSIONAL ENGINEER
11-16-2021

SHEET:
G5.0
FUELING - USA

PRINTED BY: GDELARDSA
DRAWING NAME: 38912 – G5.0 DISPENSER AND SUMP DETAILS.DWG
PRINT DATE: Nov 16, 2021 – 9:42am

KEY NOTES

1. PAINT VENT PIPES PER GULF BRANDING SPECIFICATIONS.
2. PAINT VENT RACK, BOLLARDS AND ALL OTHER EXPOSED METALS PER GULF BRANDING SPECIFICATIONS.

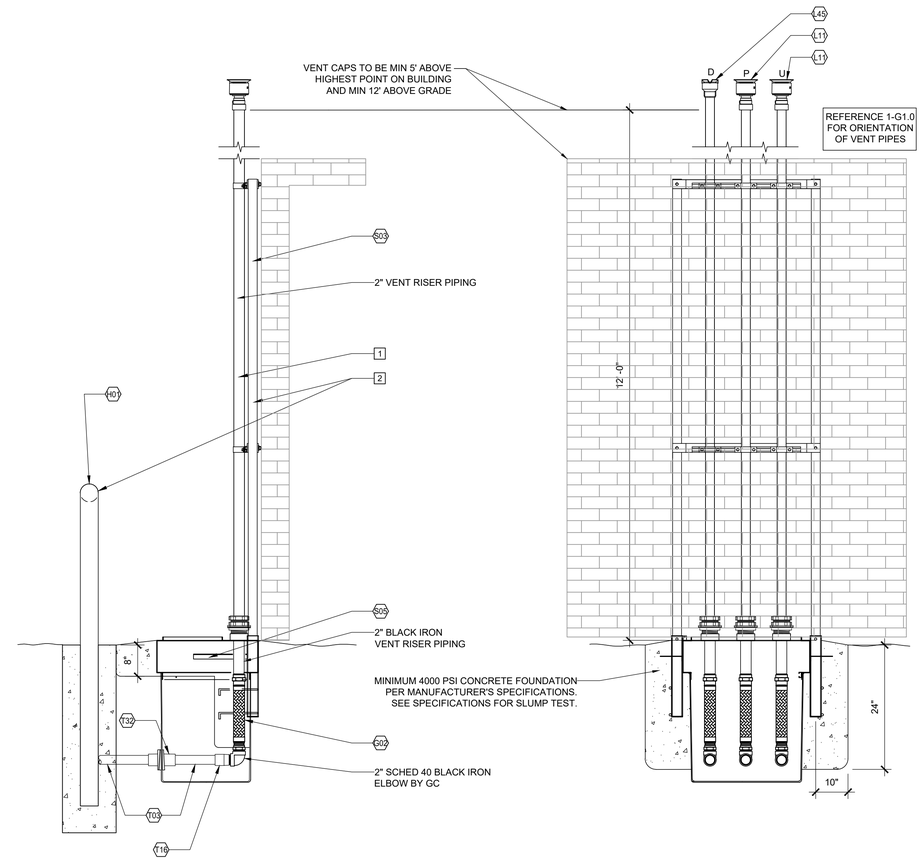

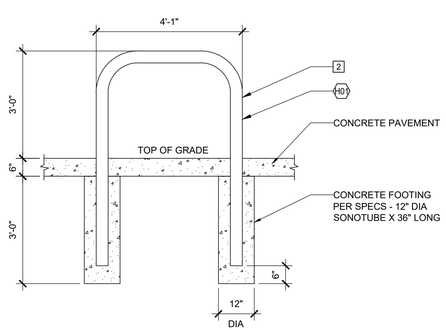

2 HOOP BOLLARD DETAIL
1/2"=1'-0"

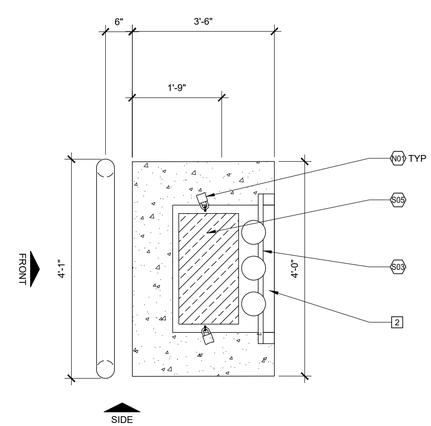

PLAN

1 TANK VENT RISER SECTIONS
3/4"=1'-0"

Rev. #	Date	Description

Proto 12-01-2020

7-ELEVEN, INC.
3200 HACKBERRY ROAD, IRVING TEXAS 75063

7-ELEVEN #38912
3451 CROMPOND ROAD
YORKTOWN HEIGHTS, NEW YORK 10598

REMOTE VENT AND DETAILS

CORE STATES GROUP
CORESTATES ARCHITECTURE ENGINEERING P.C.
NEW YORK CERTIFICATE OF AUTHORIZATION 0026-21-00
46 East Main Street Suite 201 Bridgewater, NJ 08876 908.443.7000 www.corestates.com

Job#:	SEI-32507
Scale:	AS NOTED
Date:	08/24/21
Drawn By:	GJD
Checked By:	CGC

Documents prepared by Core States Group are to be used only for the specific project and specific use for which they are intended. Any extension of use to other projects, by owner or anyone other than those specifically expressed, written consent of Core States Group is done at the user's own risk. If used in a way other than that specifically intended, user will hold Core States Group harmless from all claims and losses.

STATE OF NEW YORK · DAVID M LEIFER · 092655 · LICENSED PROFESSIONAL ENGINEER
11-16-2021

SHEET:
G6.0

FUELING - USA

PRINTED BY: GDELAROSA PRINT DATE: Nov 16, 2021 - 9:43am
DRAWING NAME: 38912 - G6.0 REMOTE VENT AND DETAILS.DWG

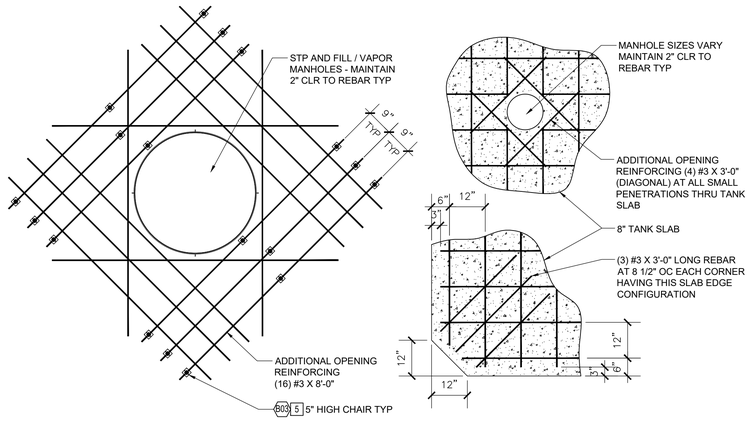

6 SLAB REINFORCING DETAILS
1/2"=1'-0"

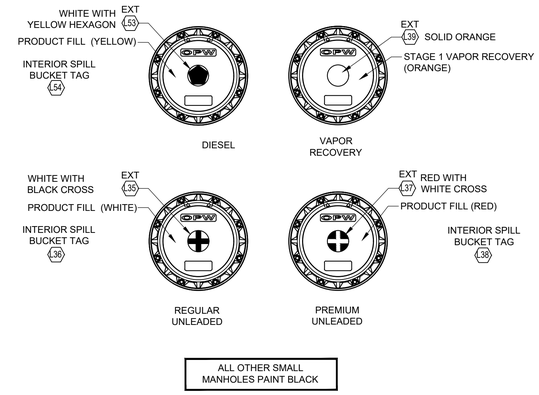

5 MANHOLE COLOR SCHEDULE
1/4"=1'-0"

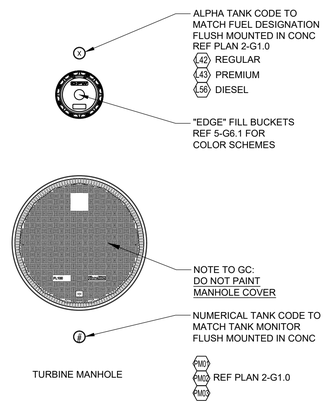

4 CONCRETE TAG AND MARKER DETAILS
1/2"=1'-0"

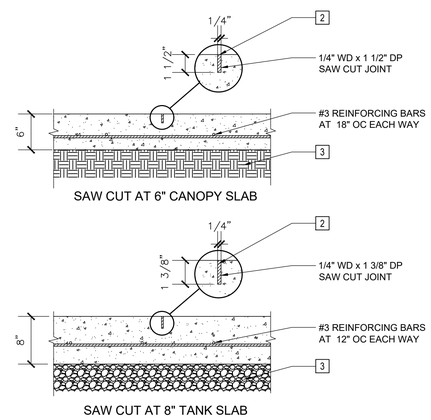

3 SAW CUT DETAILS
1/8"=1'-0"

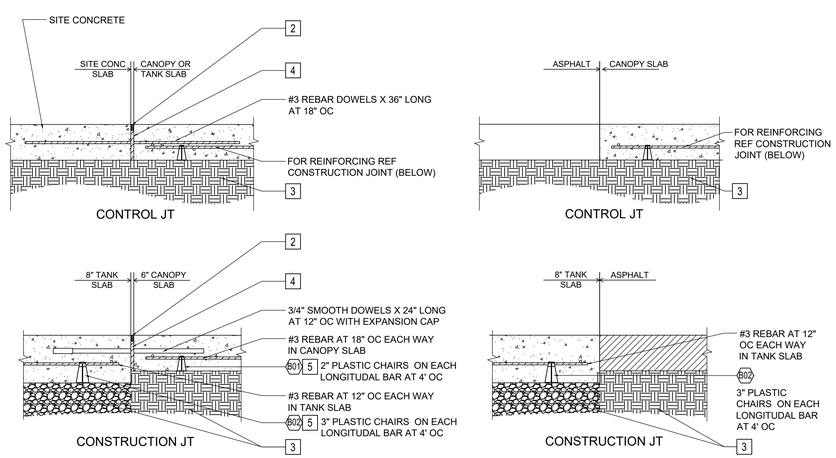

2 JOINT DETAILS
3/8"=1'-0"

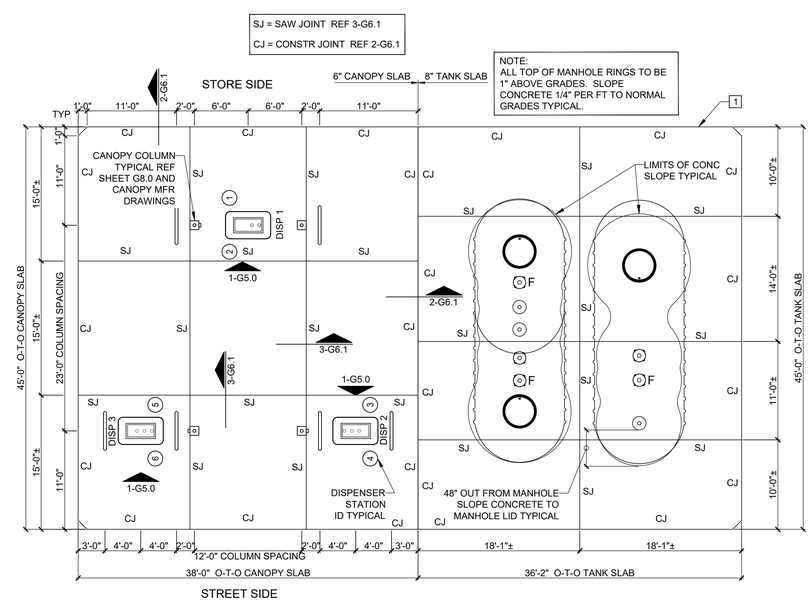

1 FUEL AREA SLAB LAYOUT AND DIMENSIONAL PLAN
1/8"=1'-0"

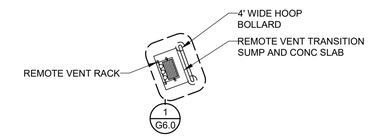

KEY NOTES

1. CONCRETE SLAB. REF G0.1 FOR TOS ELEVATIONS. ALL MANHOLES WITHIN THE TANK SLAB AREA TO BE RAISED 1" ABOVE THE NORMAL GRADE OF CONCRETE. SLOPE CONCRETE TO MANHOLES 1/4" PER FT. CROWN CONCRETE AS TO NOT INHIBIT WATER DRAINAGE OFF THE TANK SLAB (NO POOLING).
2. GASOLINE RESISTANT JOINT SEALING COMPOUND - REF SPEC SECTION V CONCRETE / PART 2 - PRODUCTS / 2.1.9.
3. UNDISTURBED SOIL OR COMPACTED BACK FILL NOT LESS THAN 95% OF MODIFIED PROCTOR DENSITY (AASHTO-T-180).
4. 1/2" THICK ASPHALT IMPREGNATED EXPANSION JOINT MATERIAL.
5. PLASTIC CASTLE CHAIRS PROVIDED BY SEI/SOURCE NA. REF G6.1 SHEET FOR CHAIR SIZES, TYPES AND LOCATIONS. REF G7.0 SHEET FOR QUANTITY.

Rev. #	Date	Description

Proto 12-01-2020

7-ELEVEN, INC.
3200 HACKBERRY ROAD, IRVING TEXAS 75063

7-ELEVEN #38912
3451 CROMPOND ROAD
YORKTOWN HEIGHTS, NEW YORK 10598

FUELING DIMENSIONAL PLAN

CORE STATES GROUP
CORESTATES ARCHITECTURE ENGINEERING P.C.
NEW YORK
CERTIFICATE OF AUTHORIZATION
No. 0026597
46 East Main Street
Suite 201
Somerville, NJ 08876
908.462.7000
www.corestates.com

Job#:	SEI-32507
Scale:	AS NOTED
Date:	08/24/21
Drawn By:	GJD
Checked By:	CGC

Documents prepared by Core States Group are to be used only for the specific project and site for which they were prepared and intended. Any extension of use to other projects, by owner or any other party, without the expressed, written consent of Core States Group is done at the user's own risk. If used in a manner other than that specifically intended, user will hold Core States Group harmless from all claims and losses.

STATE OF NEW YORK · DAVID M LEIFER · 092655 · LICENSED PROFESSIONAL ENGINEER
11-16-2021

SHEET:
G6.1

FUELING - USA

PRINTED BY: GDELAROSA
DRAWING NAME: 38912 – G6.1 FUELING DIMENSIONAL PLANLOWG PRINT DATE: Nov 16, 2021 – 9:43am

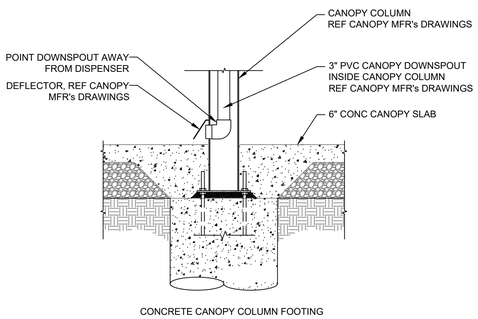

4 CANOPY DRAIN DETAIL
1/2" = 1'-0"

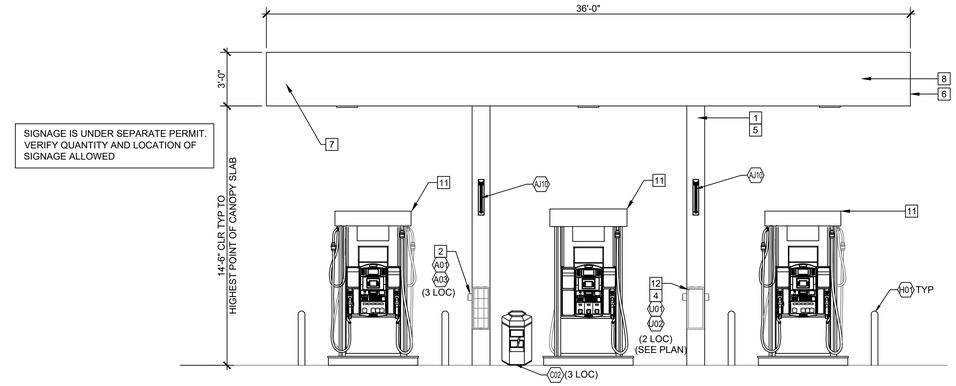

3 CANOPY END ELEVATION
1/4" = 1'-0"

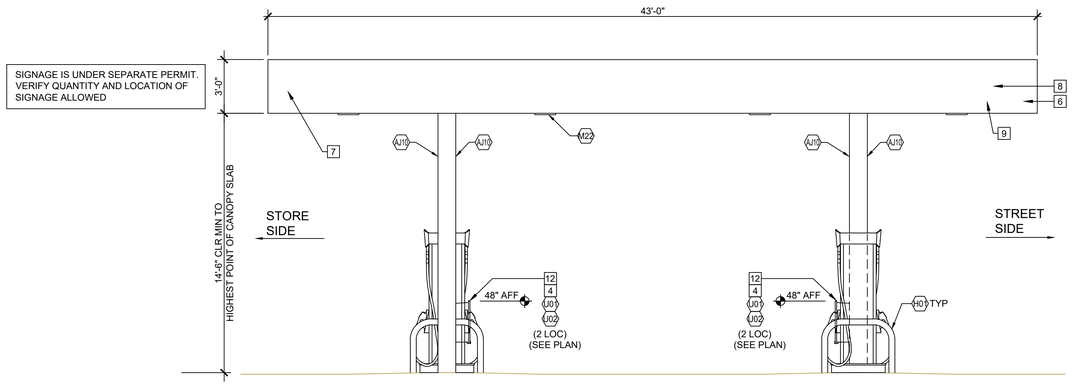

2 CANOPY SIDE ELEVATION
1/4" = 1'-0"

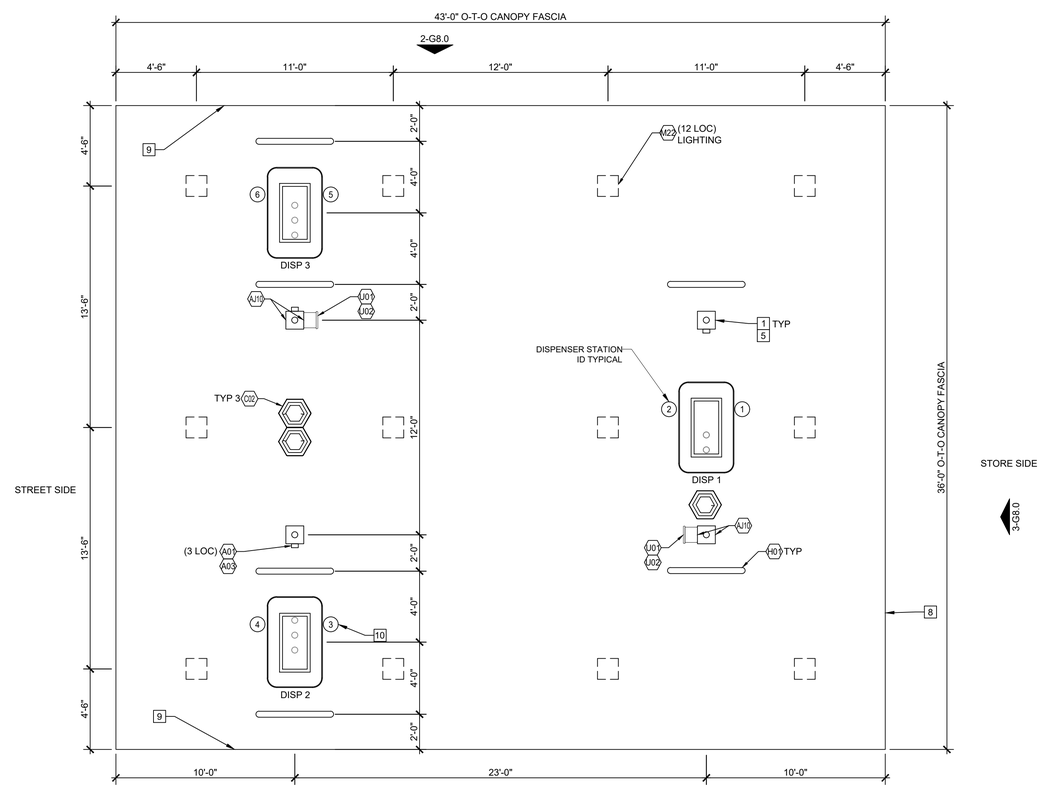

1 FUELING CANOPY PLAN
1/4" = 1'-0"

GENERAL NOTES

1. GRADES AROUND DISPENSERS AND CANOPY TO BE SHOT TO PREVENT PONDING AROUND THE DISPENSERS. CONTRACTOR TO REMOVE AND REPAIR PAVEMENT IF PONDING OCCURS.
2. NO CONDUITS OR DOWNSPOUTS ON EXTERIOR OF CANOPY COLUMNS.
3. REFER TO GRADING PLAN FOR FINAL ELEVATIONS.

KEY NOTES

1. CANOPY COLUMN - PAINT PER GULF SPECIFICATIONS.
2. INTERCOM CALL BOX. MECHANICALLY FASTENED TO COLUMN. MOUNT AT 46" MAX. ABOVE SLAB TO BUTTON.
3. NOT USED
4. FIRE EXTINGUISHER - ADA MOUNTING HEIGHT TO BE MAX. 48" FROM GRADE TO FIRE EXTINGUISHER
5. DOWNSPOUT FROM CANOPY (INSIDE THE COLUMN) TO TIE INTO STORM DRAIN WHEN AVAILABLE AND TO DRAIN OUT OF COLUMN PARALLEL TO AND AWAY FROM DISPENSER IN ALL OTHER CASES
6. OVERFLOW PROTECTION AS REQUIRED. SEE CANOPY DRAWINGS AND SPECIFICATIONS.
7. GASOLINE CANOPY, SEE MANUFACTURER'S DRAWINGS AND SPECIFICATIONS FOR DETAILS OF CONSTRUCTION.
8. ACM CANOPY FASCIA.
9. LOGO SIGNS UNDER SEPARATE PERMIT. VERIFY QUANTITY AND LOCATION OF SIGNS ALLOWED.
10. FUELING POSITION NUMBER.
11. REF 1-G5.0 FOR DISPENSER TYPE
12. FIRE EXTINGUISHER CABINET MOUNTED ON SIDE OF COLUMN REF PLAN FOR LOCATION
13. REF G7.0 FOR EQUIPMENT TAG (XXX) DESCRIPTION

Rev. #	Date	Description

Proto 12-01-2020

7-ELEVEN, INC.
3200 HACKBERRY ROAD, IRVING TEXAS 75063

7-ELEVEN #38912
3451 CROMPOND ROAD
YORKTOWN HEIGHTS, NEW YORK 10598

FUELING CANOPY LAYOUT - 3 STACK

CORE STATES GROUP
CORESTATES ARCHITECTURE ENGINEERING P.C.
NEW YORK CERTIFICATE OF AUTHORIZATION
No. 0026797
44 East Main Street
Suite 200
Bridgeville, NJ 08876
908.462.3700
coresystems.com

Job#:	SEI-32507
Scale:	AS NOTED
Date:	08/24/21
Drawn By:	CGC
Checked By:	CVK

Documents prepared by Core States Group are to be used only for the specific project and site specific use for which they are intended. Any extension of use to other projects, by owner or any others, without the express, written consent of Core States Group is done at the user's own risk. If used in a way other than that specifically intended, user will hold Core States Group harmless from all claims and losses.

STATE OF NEW YORK
DAVID M LEIFER
092655
LICENSED PROFESSIONAL ENGINEER
11-16-2021

SHEET:
G8.0
FUELING - USA

PRINTED BY: GDELAROSA
DRAWING NAME: 38912 - G8.0 FUELING CANOPY LAYOUT - 3 STACKED.DWG PRINT DATE: Nov 16, 2021 - 9:44am

GENERAL NOTES

1. SIGNAGE IS PROVIDED BY 7-ELEVEN OR GC. SIGNAGE TO BE INSTALLED BY CONTRACTOR PER 7-ELEVEN GUIDELINES,

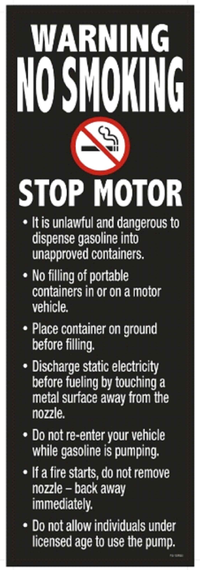

9 WARNING NO SMOKING
N.T.S.

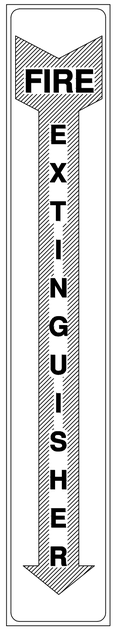

8 FIRE EXTINGUISHER
N.T.S.

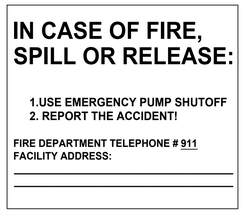

7 IN CASE OF FIRE, SPILL OR RELEASE
N.T.S.

6 GAS PUMPS ARE VIDEO MONITORED
N.T.S.

5 CONTAINS 10% ETHANOL
N.T.S.

4 LOW SULFUR HIGHWAY DIESEL FUEL
N.T.S.

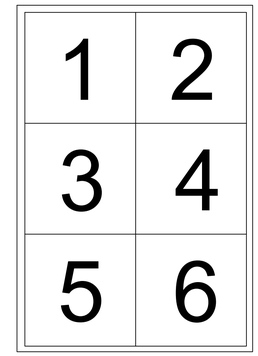

3 DISPENSER NUMBERS
N.T.S.

2 EMERGENCY SHUT OFF
N.T.S.

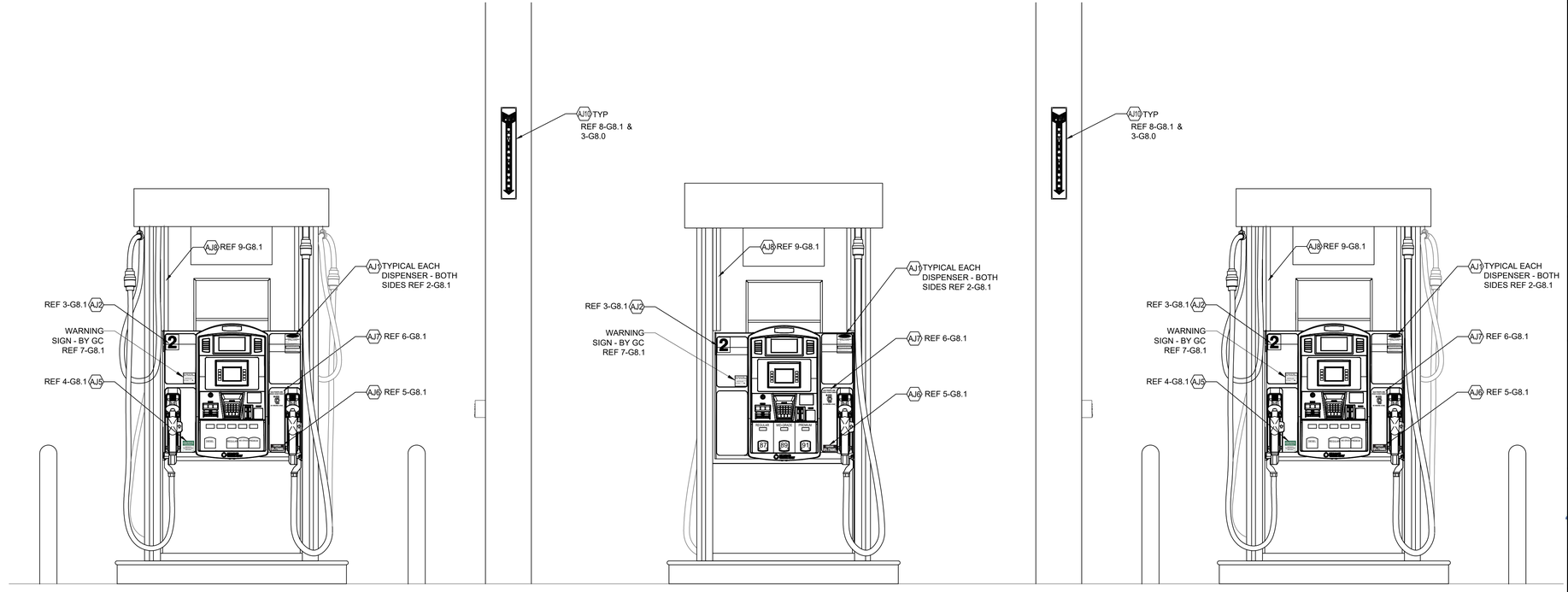

1 DISPENSER SIGNAGE ELEVATION
3/4"" = 1'-0"

Rev. #	Date	Description

Proto 12-01-2020

7-ELEVEN, INC.
3200 HACKBERRY ROAD, IRVING TEXAS 75063

7-ELEVEN #38912
3451 CROMPOND ROAD
YORKTOWN HEIGHTS, NEW YORK 10598

SIGNAGE DETAILS

CORE STATES GROUP
CORESTATES ARCHITECTURE AND ENGINEERING P.C.
NEW YORK
CERTIFICATE OF AUTHORIZATION
No. 0026777
46 East Main Street
Suite 201
Somerville, NJ 08876
908.463.9700
corestates.com

Job#:	SEI-32507
Scale:	AS NOTED
Date:	08/24/21
Drawn By:	GJD
Checked By:	CGC

Documents prepared by Core States Group are to be used only for the specific project and specific purpose for which they were intended. Any extension of use to other projects, by owner or any other party, without the express written consent of Core States Group is done at the user's own risk. If used in a manner other than specifically intended, user will hold Core States Group harmless from all claims and losses.

STATE OF NEW YORK
DAVID M. LEIFER
092655
LICENSED PROFESSIONAL ENGINEER
11-16-2021

SHEET:
G8.1
FUELING - USA

PRINTED BY: GDELARGSA
DRAWING NAME: 38912 - G8.1 SIGNAGE DETAILS.DWG
PRINT DATE: Nov 16, 2021 - 9:45am

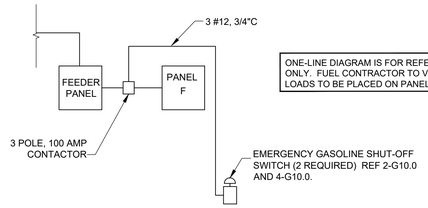

ONE-LINE DIAGRAM IS FOR REFERENCE ONLY. FUEL CONTRACTOR TO VERIFY LOADS TO BE PLACED ON PANELS.

NOTE:

(1) GENERAL CONTRACTOR TO INSTALL PANELS CIRCUIT BREAKERS AND CONDUIT.
(2) FUEL CONTRACTOR SHALL INSTALL WIRING (FROM CIRCUIT BREAKERS TO EQUIPMENT), RELAYS, ETC. MAKE ALL CONNECTIONS AND COMPLETE SEAL OFF.

3 PARTIAL ELECTRICAL ONE-LINE DIAGRAM
1/8"=1'-0"

F — NEW PANELBOARD

100A MAIN LUG ONLY
1PH 3WIRE 208/120V
GROUND BAR

SERVES: TENANT SPACE
LOCATION: STOCKROOM
MOUNTING: SURFACE

CK	LOAD SERVED	WIRE	BRKR	PL	PHASE C		PHASE A		PL	BRKR	WIRE	LOAD SERVED	CK
1	DISPENSER #1	12	20	1	1.08	1.08			1	20	12	DISPENSER #2	2
3	SWITCHED NEUTRAL	--	--	-			0.00	0.00	-	--	--	SWITCHED NEUTRAL	4
5	DISPENSER #3	12	20	1	1.08	0.00			1	20	--	SPARE	6
7	SWITCHED NEUTRAL	--	--	-			0.00	0.00	1	20	--	SPARE	8
9	SPARE	--	20	1	0.00	0.00			1	20	--	SPARE	10
11	SPARE	--	20	1			0.00	0.00	1	20	--	SPARE	12
13	SPARE	--	20	1	0.00	0.00			1	20	--	SPARE	14
15	SPARE	--	20	1			0.00	0.00	1	20	--	SPARE	16
17	RUL STP	12	20	2	1.09	1.09			2	20	12	PUL STP	18
19	-----	--	--	-			1.09	1.09	-	--	--	-----	20
21	D-BOX CONTROLLER	12	20	1	0.11	1.09			2	20	12	DSL STP	22
23	SPACE	--	--	-			0.00	1.09	-	--	--	-----	24
25	SPACE	--	--	-	0.00	0.00			-	--	--	SPACE	26
27	LOW VOLTAGE DISC	12	20	1			0.36	0.72	1	20	12	HOOK ISOLATION BOX	28
29	SPACE	--	--	-	0.00	0.00			1	20	12	SPACE	30
			TOTAL		6.62		4.35		KVA				
					55.17		36.25		AMPS				
			TOTAL LOAD		10.97	KVA		52.74	AMPS				
PER NEC ARTICLE 220			FEEDER LOAD		10.97	KVA		52.74	AMPS				

COORDINATE RECONFIGURATION OF EXISTING FUELING PANEL AND FUELING AREA CIRCUIT LOAD INFORMATION WITH ALL EXISTING PANELS. DISCONNECT ALL NON-FUELING CIRCUITS IN EXISTING FUEL PANEL AND RECONNECT TO OTHER AVAILABLE PANELS IF POSSIBLE.

FUELING CONTRACTOR TO SUPPLY AND INSTALL BREAKERS AS REQUIRED AND VERIFY EXISTING ELECTRICAL PANELS CAN MEET LOAD REQUIREMENTS. ALL NEW BREAKERS SHALL BE OF THE SAME MAKE, MODEL AND AIC RATING AS EXISTING.

COORDINATE PANEL F AND FUELING AREA CIRCUIT LOAD INFORMATION WITH FUEL CONTRACTOR. FUEL CONTRACTOR TO SUPPLY AND INSTALL NEW PANELS AND VERIFY ELECTRIC PANEL CAN MEET LOAD REQUIREMENTS.

FUEL GC TO PROVIDE SINGLE PHASE POWER TO THE MAG-VFC. THREE PHASE POWER TO RUN FROM MAG-VFC TO 2 HP VARIABLE SPEED STP'S.

NOTE:

NEW PANEL 'F' TO MATCH MANUFACTURER AND AIC RATING OF EXISTING PANELS. ALL OVERCURRENT DEVICES INSTALLED SHALL MATCH THE MAKE, MODEL, AND INTERRUPTING CAPACITY OF THE EXISTING OVERCURRENT DEVICES.

CONTRACTOR TO REMOVE EXISTING DISPENSERS, STPs AND D-BOX FROM EXISTING PANELS, AND PROVIDE A NEW 60A BREAKER TO FEED PANEL 'F.'

PANEL 'F' IS BEING ADDED TO MEET 7-ELEVEN STANDARDS FOR EMERGENCY STOP PROTOCOL. ALL EQUIPMENT IS BEING REPLACED LIKE FOR LIKE, NO NEW LOAD IS BEING ADDED TO THE SERVICE.

CONDUIT SCHEDULE

NAME	DESCRIPTION	CONDUIT SIZE	QTY	WIRE SIZE / MFR #	WIRE QTY
101	DISPENSER POWER - NON DIESEL**	3/4"	1	#12 THWN-2	1#12 HOT, 1#12 NEUT, 1#12 GR***
102	DISPENSER SUMP SENSOR	3/4"	3	BELDEN #88760	1
103	DISPENSER DATA *	3/4"	3	2-WIRE TWISTED PAIR CAT6 FEP/FEP (WCW7931AFEQ)	2 PAIR 1
104	NOT USED	-	-	-	-
105	RUL TANK ATG/SUMP, INTERSTITIAL, FILL SENSORS	3/4"	1	BELDEN #88760	4 #88760
106	PUL/DSL TANK ATG/SUMP, INTERSTITIAL, FILL SENSORS	3/4"	1	BELDEN #88760	7 #88760
107	FILL BUCKET SENSORS	3/4"	3	BELDEN #88760	1
108	STP SUMP SENSOR/ATG PROBE	3/4"	3	BELDEN #88760	2
109	INTERCOM	1"	1	BELDEN 8762	2 PAIR PER CALL BOX
110	DISPENSER POWER - DIESEL**	3/4"	2	#12 THWN-2	1#12 HOT, 1#12 NEUT, 1#12 GR***
111	1.5HP STP POWER**	3/4"	3	#12 THWN-2	2#12 HOTS, 1#12 GR
112	NOT USED	-	-	-	-
113	CANOPY LIGHTING POWER**	3/4"	2	#10 THWN-2	1#10 HOT, 1#10 NEUT, 1#10 GR
114	CANOPY SIGN POWER**	3/4"	1	#10 THWN-2	1#10 HOT, 1#10 NEUT, 1#10 GR
115	MAIN ID SIGN POWER**	3/4"	1	PULL STRING	PULL STRING
116	MAIN ID SIGN DATA	3/4"	1	PULL STRING	PULL STRING

* REFERENCE GILBARCO FIELD WIRING DIAGRAM FOR COMPLETE SPECIFICATIONS
** CONTRACTOR TO UPSIZE CONDUCTORS FOR VOLTAGE DROPS AS REQUIRED
*** REFERENCE SHEET G11.0 FOR DISPENSER HOOK ISOLATION WIRING DIAGRAM. RUN ISOLATION WIRING AS REQUIRED WITHIN DISPENSER POWER CONDUITS.

FUELING CONTRACTOR:
EXTEND CONDUITS AS REQUIRED TO NEW DISPENSERS AND NEW FUEL TANKS. TIE TO EXISTING WHERE IT IS POSSIBLE. NEW CONDUITS AS REQUIRED. SEE SPECIFICATION SHEET G16.0, SECTION VII, 2.3.1 FOR CONDUIT TYPES.

NOTE: PULL ALL NEW WIRES AND PULL STRINGS AS REQUIRED.

NOTE: TIE NEW DISPENSER AND SUMP CONDUIT INTO EXISTING ELECTRICAL ROOM AS REQUIRED. FIELD VERIFY EXISTING CONDITIONS.

FOR STP POWER CONDUITS, USE ONLY ROB ROY CONDUIT TYPES "PERMA-COAT", "PLASTI-BOND" OR "KORKAP" WHERE BRAVO FITTINGS ARE USED AND NO PVC CONDUIT IS PERMITTED. ROUTE CONDUITS IN SEPERATE RACEWAY.

NOTE: PVC CONDUIT (WHERE ALLOWED BY AHJ), MAY BE USED. SEE SPECIFICATION SHEET G16.0, SECTION 2.3.1 FOR LOCATIONS WHERE PVC CONDUIT MAY BE USED.

NOTE: ROUTE ALL CONDUITS UNDERGROUND TO C-STORE ELEC ROOM. DATA/COM CABLE EXCESS TO BE COILED IN ELEC RM FOR ROUTING ABOVE CEILING IN C-STORE TO FINAL TERMINATION POINT.

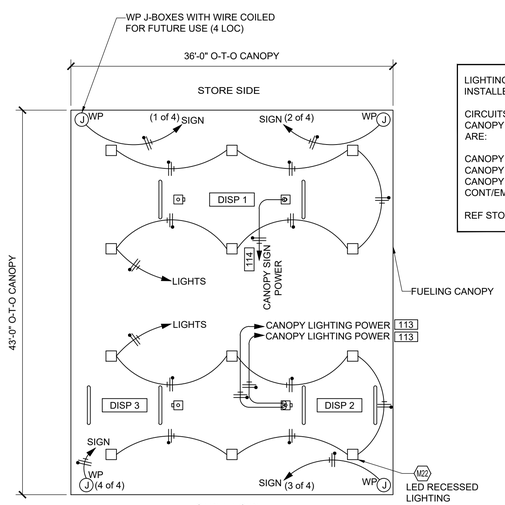

LIGHTING SUPPLIED BY 7-ELEVEN, INC AND INSTALLED BY FUEL CONTRACTOR.

CIRCUITS REQUIRED FOR THE FUELING AREA / CANOPY LIGHTING AND MISCELLANEOUS EQUIPMENT ARE:

CANOPY LIGHTS	546 VA	20 A BREAKER
CANOPY LIGHTS	546 VA	20 A BREAKER
CANOPY SIGNS	300 VA	20 A BREAKER
CONT/EMERG SHUTOFF	40 VA	20 A BREAKER

REF STORE MEP PANEL SCHEDULES FOR LOCATION

2 CANOPY CONDUIT SCHEMATIC
1/8"=1'-0"

N

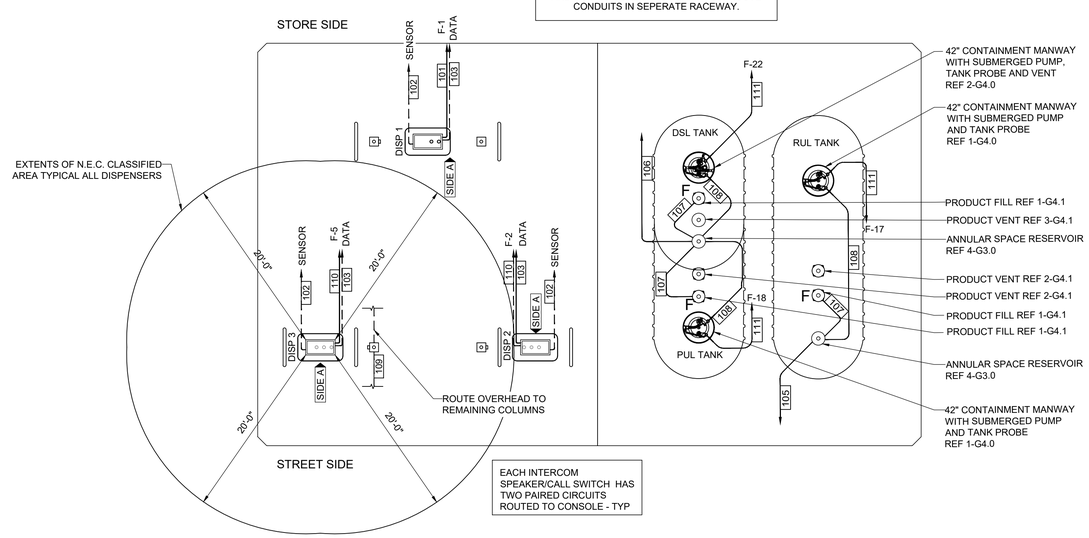

EACH INTERCOM SPEAKER/CALL SWITCH HAS TWO PAIRED CIRCUITS ROUTED TO CONSOLE - TYP

N

1 UNDERGROUND CONDUIT SCHEMATIC
1/8"=1'-0"

Rev. #	Date	Description

Proto 12-01-2020

7-ELEVEN, INC.
3200 HACKBERRY ROAD, IRVING TEXAS 75063

7-ELEVEN #38912
3451 CROMPOND ROAD
YORKTOWN HEIGHTS, NEW YORK 10598

UST ELECTRICAL PLAN, ONE-LINE DIAGRAM AND PANEL SCHEDULE

CORE STATES GROUP
CORESTATES ENGINEERING P.C.
ARCHITECTURE **NEW YORK** CERTIFICATE OF AUTHORIZATION No. 0026767
46 East Main Street
Suite 201
Somerville, NJ 08876
908.462.7700
corestatesgroup.com

Job#:	SEI-32507
Scale:	AS NOTED
Date:	08/24/21
Drawn By:	GJD
Checked By:	CGC

Documents prepared by Core States Group are to be used only for the specific project and location for which they were intended. Any extension of use to other projects, by owner or any other party, without the expressed, written consent of Core States Group is done at the user's own risk. If used in a way other than that for which they were intended, user will hold Core States Group harmless from all claims and losses.

STATE OF NEW YORK
JOHN F. FERGUSON
085807
LICENSED PROFESSIONAL ENGINEER
11-16-2021

SHEET:
G9.0

FUELING - USA

PRINT DATE: Nov 16, 2021 - 9:45am

PRINTED BY: CGELARDSA
DRAWING NAME: 38912 - G9.0 UST ELECTRICAL PLAN, ONE-LINE DIAGRAM AND PANEL SCHEDULE.DWG

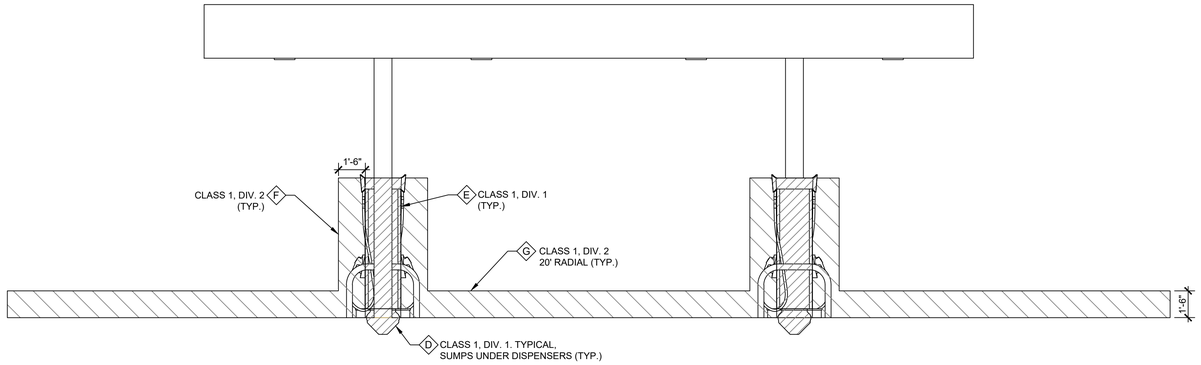

3 END ELEVATION
1/4" = 1'-0"

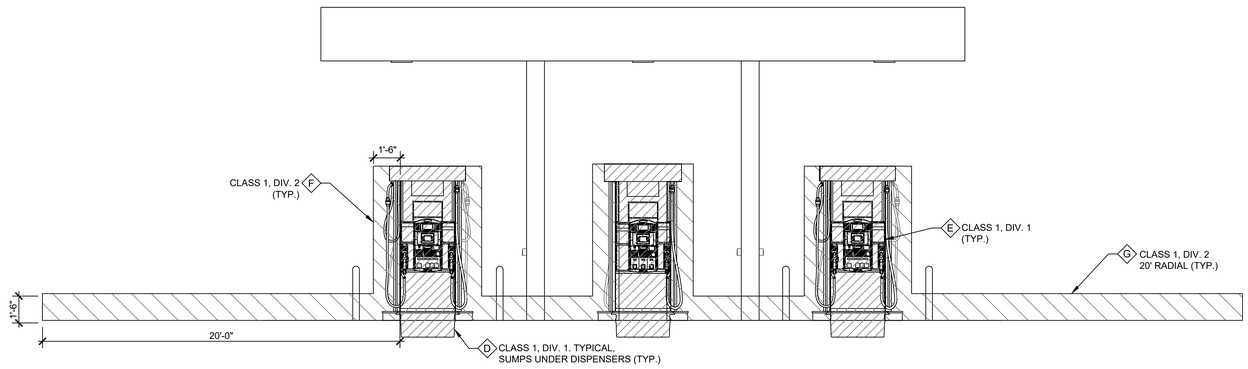

2 SIDE ELEVATION
1/4" = 1'-0"

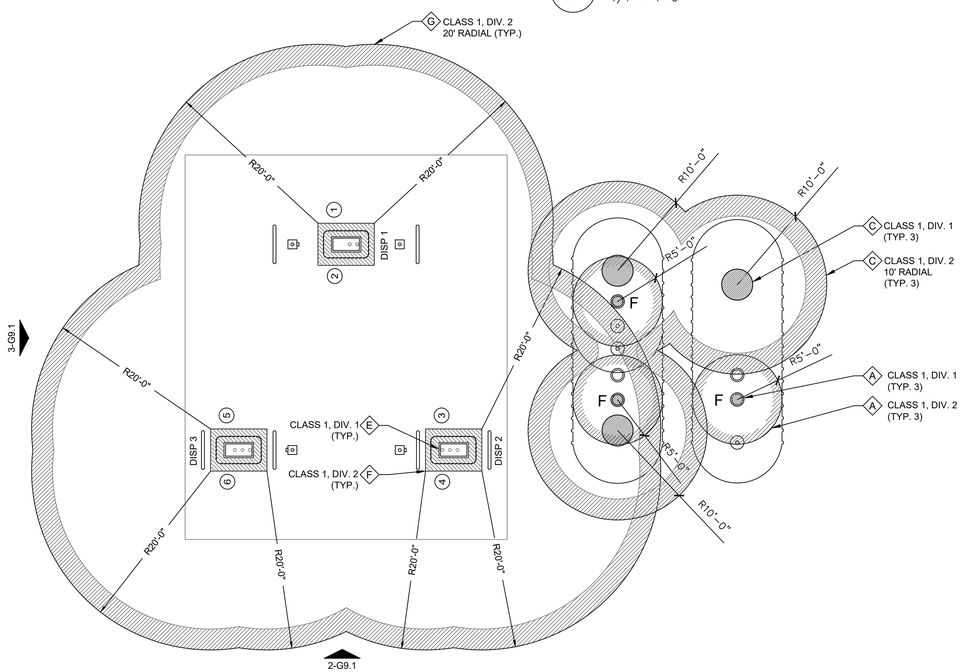

1 N.E.C. CLASSIFIED AREA @ GROUND LEVEL
1/8" = 1'-0"

N.E.C. HAZARDOUS AREA NOTES

A — TYPICAL N.E.C. ARTICLE 514 CLASS 1 LOCATION (UNDERGROUND TANK - FILL OPENING)

EXTENT OF CLASS 1, GROUP D, DIVISION 1 LOCATION:
ANY PIT, BOX, OR SPACE BELOW GRADE LEVEL, ANY PART OF WHICH IS WITHIN THE DIVISION 1 OR 2 CLASSIFIED LOCATION.

EXTENT OF CLASS 1, GROUP D, DIVISION 2 LOCATION:
UP TO 18 INCHES ABOVE GRADE LEVEL WITHIN A HORIZONTAL RADIUS OF 10 FEET FROM A LOOSE FILL CONNECTION AND WITHIN A HORIZONTAL RADIUS OF 5 FEET FROM A TIGHT FILL CONNECTION.

B — TYPICAL N.E.C. ARTICLE 514 CLASS 1 LOCATION (UNDERGROUND TANK - VENT DISCHARGING UPWARD)

EXTENT OF CLASS 1, GROUP D, DIVISION 1 LOCATION:
WITHIN 5 FEET OF OPEN END OF VENT, EXTENDING IN ALL DIRECTIONS.

EXTENT OF CLASS 1, GROUP D, DIVISION 2 LOCATION:
SPACE BETWEEN 5 FEET AND 10 FEET OF OPEN END OF VENT, EXTENDING IN ALL DIRECTIONS.

C — TYPICAL N.E.C. ARTICLE 514 CLASS 1 LOCATION (REMOTE PUMP - OUTDOOR)

EXTENT OF CLASS 1, GROUP D, DIVISION 1 LOCATION:
ANY PIT, BOX, OR SPACE BELOW GRADE LEVEL IF ANY PART IS WITHIN A HORIZONTAL DISTANCE OF 10 FEET FROM ANY EDGE OF PUMP.

EXTENT OF CLASS 1, GROUP D, DIVISION 2 LOCATION:
WITHIN 3 FEET OF ANY EDGE OF PUMP, EXTENDING IN ALL DIRECTION. ALSO UP TO 18 INCHES ABOVE GRADE LEVEL WITHIN 10 FEET HORIZONTALLY FROM ANY EDGE OF PUMP.

D — TYPICAL N.E.C. ARTICLE 514 CLASS 1 LOCATION (DISPENSING DEVICE AND REMOTE VENT - PITS)

EXTENT OF CLASS 1, GROUP D, DIVISION 1 LOCATION:
ANY PIT, BOX, OR SPACE BELOW GRADE LEVEL, ANY PART OF WHICH IS WITHIN THE DIVISION 1 OR 2 CLASSIFICATION LOCATION.

E — TYPICAL N.E.C. ARTICLE 514 CLASS 1 LOCATION (DISPENSING DEVICE - DISPENSER)

EXTENT OF CLASS 1, GROUP D, DIVISION 1 LOCATION:
SPACE CLASSIFICATION INSIDE THE DISPENSER ENCLOSURE IS COVERED IN ANSI/UL 87, "POWER OPERATED DISPENSING DEVICES FOR PETROLEUM PRODUCTS."

F — TYPICAL N.E.C. ARTICLE 514 CLASS 1 LOCATION (DISPENSING DEVICE - DISPENSER)

EXTENT OF CLASS 1, GROUP D, DIVISION 2 LOCATION:
WITHIN 18 INCHES HORIZONTALLY IN ALL DIRECTIONS EXTENDING TO GRADE FROM (1) THE DISPENSER ENCLOSURE OR (2) THAT PORTION OF THE DISPENSER ENCLOSURE CONTAINING LIQUID HANDLING COMPONENTS. SPACE CLASSIFICATION INSIDE THE DISPENSER ENCLOSURE IS COVERED IN ANSI/UL 87, "POWER OPERATED DISPENSING DEVICES FOR PETROLEUM PRODUCTS."

G — TYPICAL N.E.C. ARTICLE 514 CLASS 1 LOCATION (DISPENSING DEVICE - OUTDOOR)

EXTENT OF CLASS 1, GROUP D, DIVISION 2 LOCATION:
UP TO 18 INCHES ABOVE GRADE LEVEL WITHIN 20 FEET HORIZONTALLY OF ANY EDGE OF ENCLOSURE.

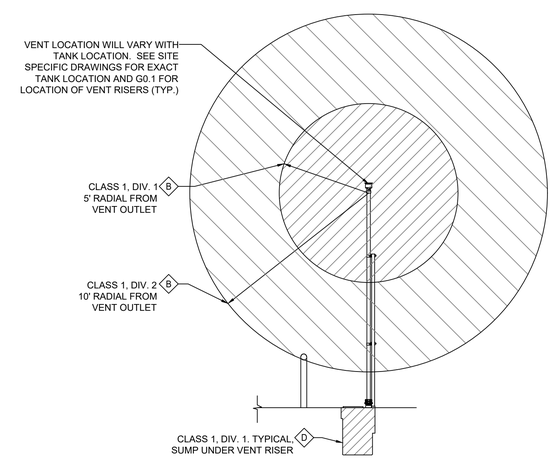

4 N.E.C. CLASSIFIED AREA AT REMOTE VENT
1/4" = 1'-0"

Rev. #	Date	Description

Proto 12-01-2020

7-ELEVEN, INC.
3200 HACKBERRY ROAD, IRVING TEXAS 75063

7-ELEVEN #38912
3451 CROMPOND ROAD
YORKTOWN HEIGHTS, NEW YORK 10598

N.E.C. CLASSIFIED AREA

CORE STATES GROUP
CORESTATES ARCHITECTURE & ENGINEERING P.C.
NEW YORK
CERTIFICATE OF AUTHORIZATION
0026870-000
46 East Main Street
Suite 206
Somerville, NJ 08876
908.462.3700
corestatesgroup.com

Job#:	SEI-32507
Scale:	AS NOTED
Date:	08/24/21
Drawn By:	GJD
Checked By:	CGC

Documents prepared by Core States Group are to be used only for the specific project and site for which they are prepared and intended. Any extension of use to other projects, by owner or any other party with whom Core States Group is done at the user's own risk. If used in a way other than that specifically intended, user will hold Core States Group harmless from all claims and losses.

STATE OF NEW YORK
JOHN F. FERGUSON
085807
LICENSED PROFESSIONAL ENGINEER
11-16-2021

SHEET:
G9.1

FUELING - USA

PRINTED BY: GDELVAROSA
DRAWING NAME: 38912 - G9.1 N.E.C. CLASSIFIED AREA.DWG PRINT DATE: Nov 16, 2021 - 9:46am

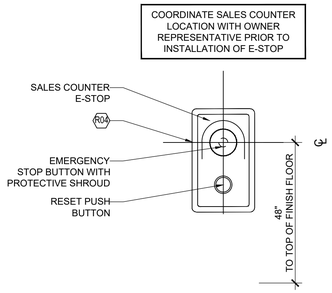

4 EMERGENCY SHUT–OFF SALES COUNTER
NTS

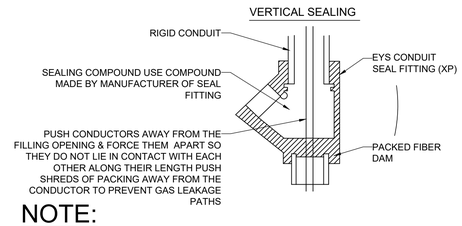

NOTE:

PROVIDE EXPLOSION PROOF SEALS. IN ACCORDANCE WITH ARTICLE 501, CLASS 1, DIVISION 2 OF THE LATEST NATIONAL ELECTRICAL CODE TYPICAL FOR ALL UNDERGROUND CONDUIT STUB-UPS INTO EQUIPMENT

SEAL OFF ALL CONDUIT ENTERING OR LEAVING CAVITIES OR ENCLOSURES OF DISPENSERS AND ASSOCIATED EQUIPMENT. IN ADDITION, ALL CONDUITS COMING FROM THE BUILDING THROUGH A HAZARDOUS LOCATION ALSO REQUIRE SEAL-OFFS AT BOTH ENDS.

3 SEAL FITTING INSTALLATION
NTS

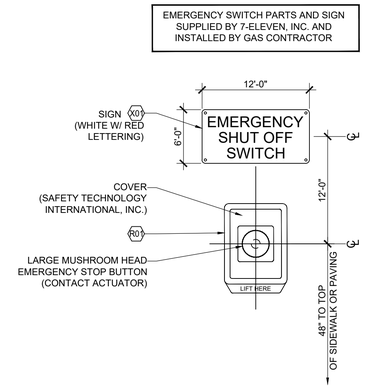

2 EMERGENCY SHUT OFF W/ COVER
NTS

FUELING CONTRACTOR:
EXTEND CONDUITS AS REQUIRED TO NEW DISPENSERS AND FUEL TANKS. TIE TO EXISTING WHERE IT IS POSSIBLE. SEE SPECIFICATION SHEET G16.0, SECTION VII, 2.3.1 FOR CONDUIT TYPES.

NOTE: PULL ALL NEW WIRES AND PULL STRINGS AS REQUIRED.

NOTE: REARRANGE LAYOUT OF EQUIPMENT AS REQUIRED TO FIT NEW PANEL, ISOLATION RELAY BOXES, CONTROL BOXES, NEW CONDUITS, DBOX AND LOW-VOLTAGE DISCONNECT IN EXISTING ELECTRICAL ROOM. REMOVE OLD UNUSED PANELS AND BOXES AS REQUIRED TO MAKE ROOM FOR NEW EQUIPMENT.

NOTE: TIE NEW DISPENSER AND SUMP CONDUIT INTO EXISTING ELECTRICAL ROOM AS REQUIRED. FIELD VERIFY EXISTING CONDITIONS.

NOTE:
REFERENCE SHEET G11.0 FOR DISPENSER HOOK ISOLATION WIRING DIAGRAMS, STP CONTROLLER, AND VEEDER ROOT RELAY MODULE WIRING DIAGRAMS.

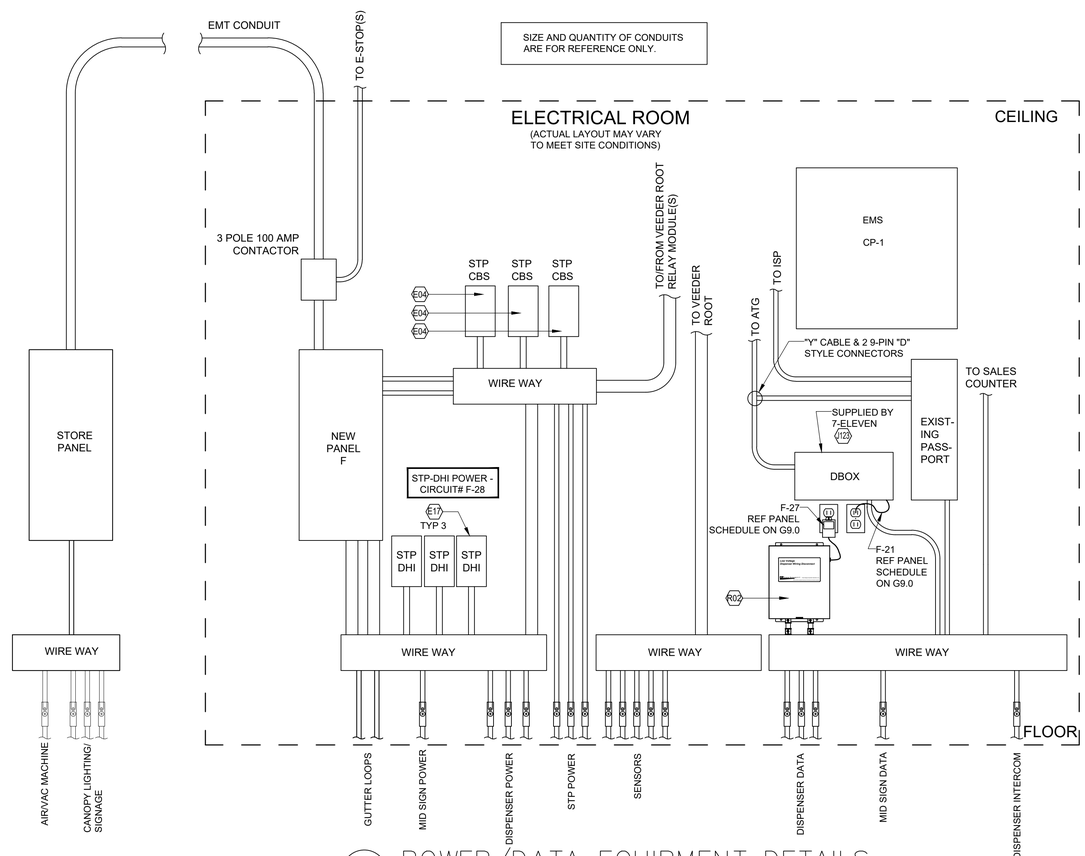

1 POWER/DATA EQUIPMENT DETAILS
NTS

Rev. #	Date	Description

Proto 12-01-2020

7-ELEVEN, INC.
3200 HACKBERRY ROAD, IRVING TEXAS 75063

7-ELEVEN #38912
3451 CROMPOND ROAD
YORKTOWN HEIGHTS, NEW YORK 10598

MISCELLANEOUS ELECTRICAL DETAILS

CORE STATES GROUP
CORESTATES ARCHITECTURE AND ENGINEERING P.C.
AN WBE COMPANY
CERTIFICATE OF AUTHORIZATION #0A26108600
46 East Main Street
Suite 205, NJ 08876
908.400.7000
www.corestatesgroup.com

Job#:	SEI-32507
Scale:	AS NOTED
Date:	08/24/21
Drawn By:	GJD
Checked By:	CGC

Documents prepared by Core States Group are to be used only for the specific project and specific use for which they are intended. Any extension of use to other projects, by owner or another party, without written consent of Core States Group is done at the user's own risk. If used in a way other than that specifically intended, user will hold Core States Group harmless from all claims and losses.

STATE OF NEW YORK
CHRIS FERGUSON
085847
LICENSED PROFESSIONAL ENGINEER
11-16-2021

SHEET:
G10.0
FUELING - USA

PRINTED BY: GDELAROSA
DRAWING NAME: 38912 – G10.0 MISCELLANEOUS ELECTRICAL DETAILS.DWG PRINT DATE: Nov 16, 2021 – 9:46am

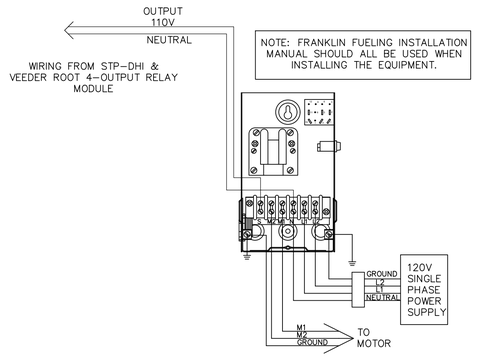

2 STP-CBS WIRING DIAGRAM
NTS

GENERAL NOTES

1 INSTALL POWER BREAKERS TO EACH CIRCUIT LEADING TO THE DISPENSING UNIT AND STP. THEY MUST BE CAPABLE OF SIMULTANEOUSLY DISCONNECTING HOT AND NEUTRAL CONDUCTORS.

2 INSTALL CONDUIT PER NEC FOR HAZARDOUS LOCATIONS.

3 WIRES -ALL WIRES ARE 14AWG (STANDARD) UNLESS OTHERWISE NOTED. PUMP / DISP. GROUND - WIRE IS 12 AWG (STANDARD).

POWER LOADING AND DISTANCE RUN MAY REQUIRE LARGER WIRE SIZE.

4 INSTALL A SINGLE EMERGENCY POWER CUTOFF CONTROL TO REMOVE AC POWER FROM SITE DISPENSING EQUIPMENT.
(THE CONTROL IS AN ADDITION SAFETY FEATURE AND NOT A SUBSTITUTE FOR NEC/NFPA30 CIRCUIT BREAKER REQUIREMENTS).

* LABEL THE EMERGENCY POWER CUTOFF SWITCH AND INSTRUCT OWNER TO KEEP AREA CLEAR OF OBSTACLES.

5 CONNECT INSULATED GROUNDING CONDUCTOR FROM THE DISPENSER POWER PANEL TO THE SITE GROUNDING ELECTRODE. SIZE PER NEC.

6 REFER TO INSTALLATION ADDENDA FOR SPECIFIC PRODUCT FIELD WIRING CONNECTIONS. CAP ALL UNUSED WIRES. LOCAL AND NEC MAY APPLY.

7 STP ISOLATION RELAY BOXES ARE MANDATED BY THE NEC (ARTICLE 514.13 - PROVISIONS FOR MAINTENANCE AND SERVICE OF DISPENSING EQUIPMENT) AND ARE REQUIRED TO:
A. ALLOW SERVICE OF ONE UNIT SAFELY WITHOUT REMOVING POWER FROM ALL DISPENSING EQUIPMENT.
B. PREVENT DAMAGE TO EQUIPMENT FROM CROSS-PHASING.

DAMAGE CAUSED BY CROSS-PHASING IS NOT COVERED BY WARRANTY.

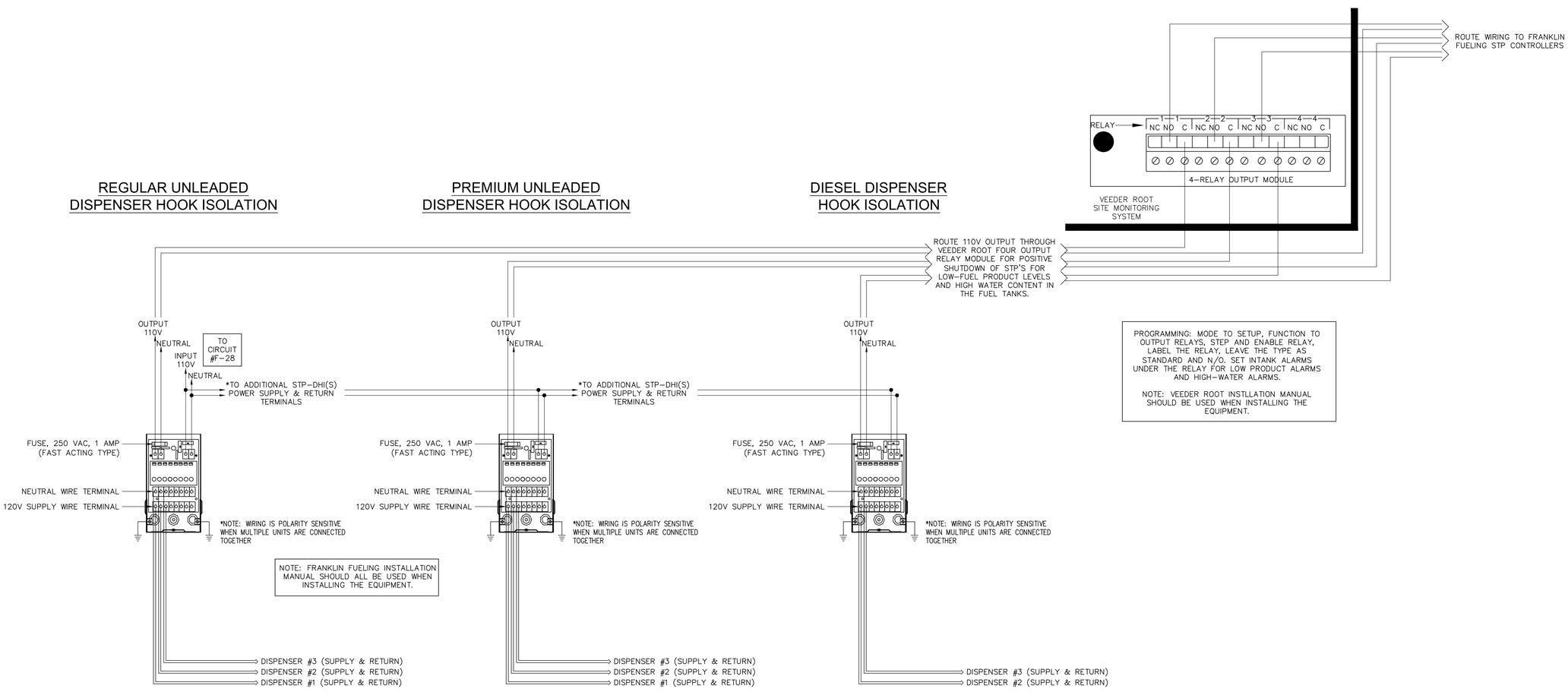

1 DISPENSER HOOK ISOLATION WIRING DIAGRAM
NTS

Rev. #	Date	Description

Proto 12-01-2020

7-ELEVEN, INC.
3200 HACKBERRY ROAD, IRVING TEXAS 75063

7-ELEVEN #38912
3451 CROMPOND ROAD
YORKTOWN HEIGHTS, NEW YORK 10598

ISOLATION RELAY BOX DETAIL

CORE STATES GROUP
CORESTATES ARCHITECTURE ENGINEERING P.C.
NEW YORK CERTIFICATE OF AUTHORIZATION
NO. 0026877
46 East Main Street
Suite 201
Somerville, NJ 08876
908.462.7200
www.corestates.com

Job#:	SEI-32507
Scale:	AS NOTED
Date:	08/24/21
Drawn By:	GJD
Checked By:	CGC

Documents prepared by Core States Group are to be used only for the specific project and location for which they are intended. Any extension of use to other projects, by owner or anyone other than those for which it was prepared, written consent of Core States Group is done at the user's own risk. If used in a way not in accordance with its intended, user will hold Core States Group harmless from all claims and losses.

STATE OF NEW YORK
JOHN FERGUSON
085807
LICENSED PROFESSIONAL ENGINEER
11-16-2021

SHEET:
G11.0
FUELING - USA

PRINTED BY: CGELARDSA
DRAWING NAME: 38912 - G11.0 ISOLATION RELAY BOX DETAIL.DWG
PRINT DATE: Nov 16, 2021 - 9:46am

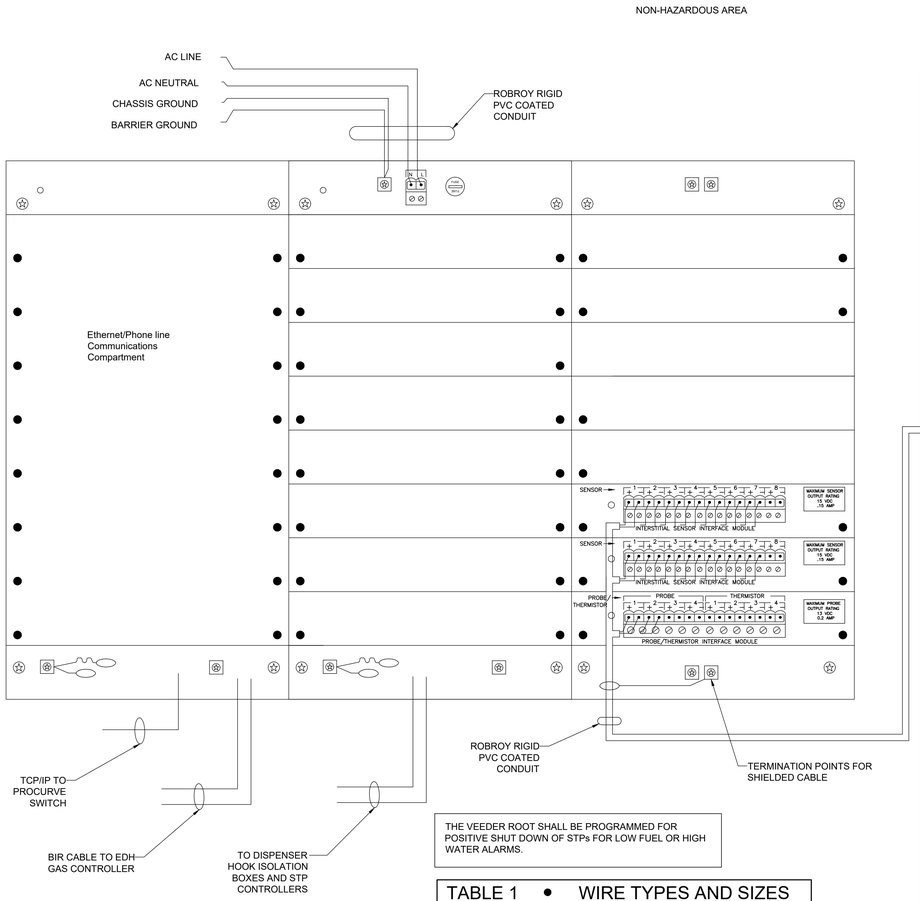

THE VEEDER ROOT SHALL BE PROGRAMMED FOR POSITIVE SHUT DOWN OF STPs FOR LOW FUEL OR HIGH WATER ALARMS.

REFER TO THE 7-ELEVEN VEEDER ROOT INSTALLATION PROTOCOL GUIDE FOR SET UP AND CONFIGURATION OF REMOTELY MONITORED VEEDER ROOT EQUIPMENT.

TABLE 1 • WIRE TYPES AND SIZES	
CABLE TYPE	PROBE OR SENSOR
BELDEN 88760	PROBE, SUMP, LIQUID, AND VACUUM SENSOR
12 AWG THWN	AC POWER TO CONSOLE

CONTRACTOR SHALL PLACE A TYPEWRITTEN SENSOR SCHEDULE THAT INDICATES WHICH CHANNEL IS ASSOCIATED WITH WHICH SENSOR

1 SITE MONITORING WIRING SCHEMATIC

1 1/2"=1'-0"

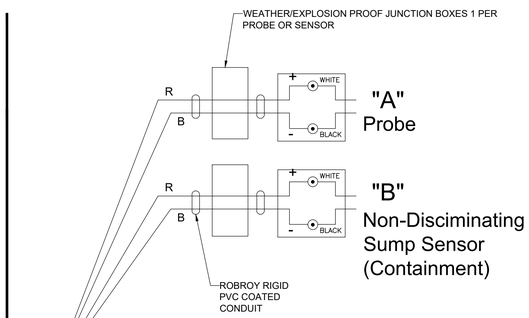

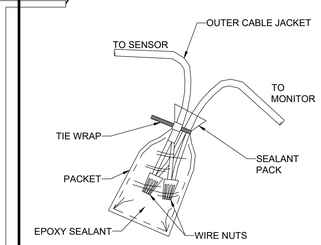

EPOXY SEALANT FOR TWO-WIRE CONNECTIONS

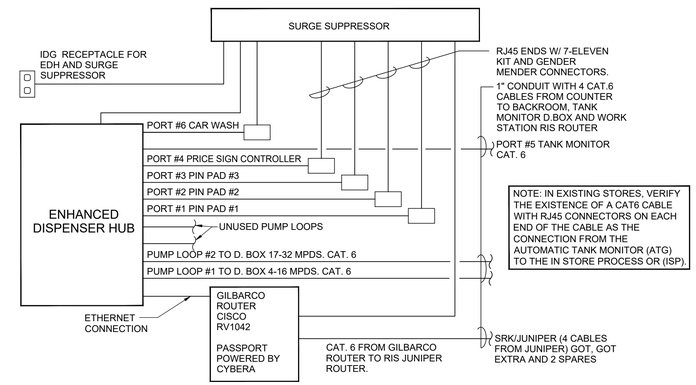

NOTE: IN EXISTING STORES, VERIFY THE EXISTENCE OF A CAT6 CABLE WITH RJ45 CONNECTORS ON EACH END OF THE CABLE AS THE CONNECTION FROM THE AUTOMATIC TANK MONITOR (ATG) TO THE IN STORE PROCESS OR (ISP).

3 ENHANCED DISPENSER HUB

NTS

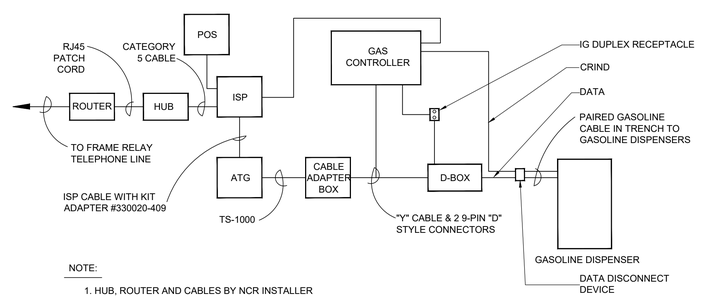

NOTE:

1. HUB, ROUTER AND CABLES BY NCR INSTALLER
2. GAS CONTROLLER, D-BOX, CRIND CONTROL CABLE, GAS CONTROLLER CABLE AND D-BOX CABLE INSTALLED BY THE GILBARCO AUTHORIZED SERVICE CONTRACTOR

2 POS GAS CONTROLLER – DEX DIAGRAM

NTS

GENERAL NOTES

IMPORTANT: THIS IS A CONTROL DRAWING ONLY AND DOES NOT REFLECT THE ACTUAL LOCATIONS OF CONDUIT ENTRY (SEE NOTE 7 BELOW).

VEEDER-ROOT REQUIRES THAT ANYONE INSTALLING OUR EQUIPMENT MUST BE LEVEL I CERTIFIED. FOR MORE INFORMATION REGARDING THE HOME STUDY INSTALLERS COURSE CONTACT JOHN HOWELL 951-532-8599.

WARNING: IN INSTALLATION AND USE OF THIS PRODUCT, COMPLY WITH THE NATIONAL ELECTRICAL CODE; FEDERAL, STATE AND LOCAL CODES. IN ADDITION, TURN OFF POWER AND TAKE OTHER NECESSARY PRECAUTIONS DURING INSTALLATION, SERVICE AND REPAIR TO PREVENT PERSONAL INJURY, PROPERTY LOSS AND EQUIPMENT DAMAGE.

WARNING: DISCONNECT ALL POWER BEFORE MAKING ANY CONNECTIONS TO PREVENT DEATH, SERIOUS INJURY, EXPLOSION, OR ELECTRICAL SHOCK. MONITOR MUST NEVER BE OPERATED UNLESS THE FRONT COVER IS CLOSED OVER THE BARRIER TERMINALS IN THE INTRINSICALLY SAFE AREA.

1. INTRINSICALLY SAFE WIRING

   BONDED CONDUIT MEANS THAT THE METALLIC SECTIONS OF CONDUIT ARE PERMANENTLY JOINED TO FORM AN ELECTRICALLY CONDUCTIVE PATH THAT WILL ASSURE ELECTRICAL CONTINUITY, AND THAT THE CONDUIT HAS THE CAPACITY TO CONDUCT SAFELY, ANY CURRENT LIKELY TO BE IMPOSED.

   a) BONDED & NON-BONDED CONDUIT - THE WIRES BETWEEN THE MONITOR AND EACH PROBE/SENSOR LOCATION MUST BE #14, #16 OR #18 AWG STRANDED COPPER WIRES WITHIN A SHIELDED CABLE. SHIELDED CABLE MUST BE RATED AT LESS THAN 100 PICOFARAD PER FOOT AND MUST BE MANUFACTURED WITH A MATERIAL SUITABLE FOR THE ENVIRONMENT, SUCH AS BELDEN™ 88760.

2. CONNECT THE BARRIER GROUND TO THE EARTH GROUND BUS AT THE POWER DISTRIBUTION PANEL WITH #12 AWG (OR LARGER) CONDUCTOR.
3. ◉ DENOTES FIELD WIRING CONNECTION USING WATERPROOF CONNECTORS SUPPLIED WITH THE PROBE(S) AND SENSOR(S).
4. INTRINSICALLY SAFE WIRING SHALL BE INSTALLED IN ACCORDANCE WITH ARTICLE 504-20 OF THE NEC, ANSI/NFPA 70.
5. TO MAINTAIN INTRINSIC SAFETY, PROBE/SENSOR WIRING MUST BE INSTALLED WITH EITHER SEALED CONDUIT OR DIRECT BURIAL METHODS. REFER TO "DIRECT BURIAL CABLE INSTALLATION", MANUAL NO. 576013-858.
6. ELECTRICAL RATING POWER INPUT 120 VAC, 50/60 HZ, 100 VA MAXIMUM.
7. THIS DOCUMENT IS NOT TO BE USED AS A SUBSTITUTE FOR SPECIFIC EQUIPMENT INSTALLATION MANUALS. FOR INSTALLATION DETAILS USE THE RESPECTIVE MANUAL:

   TLS-350(R) 576013-879
8. ALL CABINET PENETRATIONS MUST ENTER THROUGH A PRE-DRILLED CONDUIT KNOCKOUT.

Rev. #	Date	Description

Proto 12-01-2020

7-ELEVEN, INC.
3200 HACKBERRY ROAD, IRVING TEXAS 75063

7-ELEVEN #38912
3451 CROMPOND ROAD
YORKTOWN HEIGHTS, NEW YORK 10598

SITE MONITORING EQUIPMENT DIAGRAM

CORE STATES GROUP
CORESTATES ARCHITECTURE ENGINEERING P.C.
CERTIFICATE OF AUTHORIZATION
AEN-0001
46 East Main Street
Suite 205
Somerville, NJ 08876
908.400.3700
www.corestatesgroup.com

Job#:	SEI-32507
Scale:	AS NOTED
Date:	08/24/21
Drawn By:	GJD
Checked By:	CGC

Documents prepared by Core States Group are to be used only for the specific project and specific use for which they are intended. Any extension of use to other projects, by owner or another party, without written expressed, written consent of Core States Group is done at the user's own risk. If used in a way other than that specifically intended, user will hold Core States Group harmless from all claims and losses.

STATE OF NEW YORK · CHRIS FERGUSON · 085BUI · LICENSED PROFESSIONAL ENGINEER
11-16-2021

SHEET:
G12.0

FUELING - USA

PRINT DATE: Nov 16, 2021 - 9:46am
PRINTED BY: GDELAROSA
DRAWING NAME: 38912 - G12.0 SITE MONITORING EQUIPMENT DIAGRAM.DWG

Luminaire Schedule							
Symbol	Qty	Label	Arrangement	LMF	Lum. Lumens	Lum. Watts	Part Number
	9	CPY-FLAT-13L	SINGLE	1.000	12825	91	CPY250-B-DM-F-13L-UL-WH-57K-HZ

Calculation Summary; 1.00 LLF						
Label	Units	Avg	Max	Min	Avg/Min	Max/Min
All Calc Points	Fc	0.82	34.1	0.0	N.A.	N.A.
Gas Canopy	Fc	40.11	50	31	1.29	1.61
Property Line	Fc	0.29	3.7	0.0	N.A.	N.A.

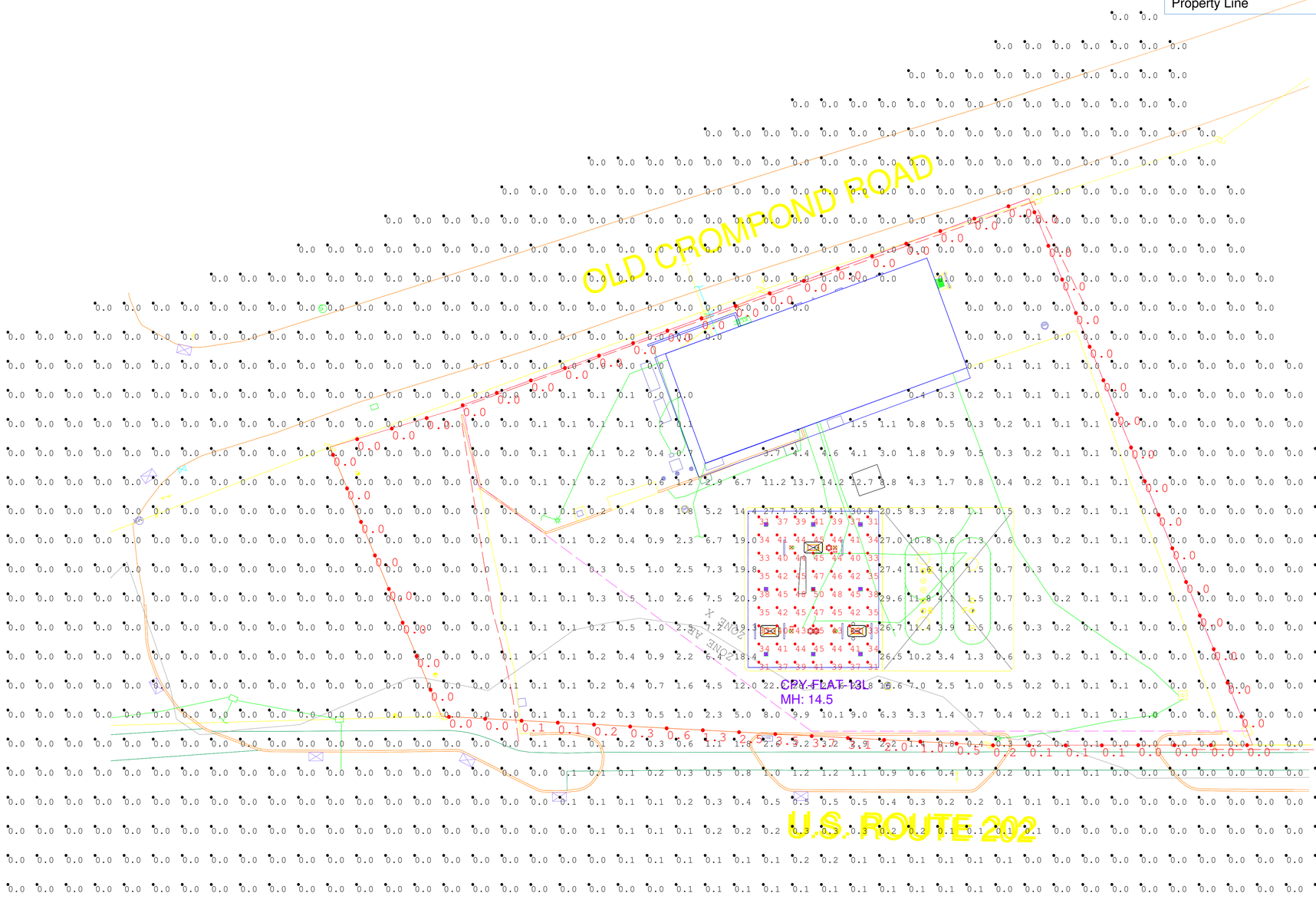

ADDITIONAL EQUIPMENT REQUIRED:

***** CUSTOMER TO VERIFY ORDERING INFORMATION AND CATALOGUE NUMBER PRIOR TO PLACING ORDER *****

BOM: Complete Part Description

09 CPY250-B-DM-F-13L-UL-WH-57K-HZ

CREE LIGHTING
A COMPANY OF IDEAL INDUSTRIES, INC.
9201 Washington Ave, Racine, WI 53406 https://creelighting.com - (800) 236-6800

Illumination results shown on this lighting design are based on project parameters provided to Cree Lighting used inconjunction with luminaire test procedures conducted under laboratory conditions. Actual project conditions differing from these design parameters may affect field results. The customer is responsible for verifying dimensional accuracy along with compliance with any applicable electrical, lighting,or energy code.

Project Name: 7-Eleven #38912 3451 Crompond Rd Yorktown Heights, NY - EXT

SR-36678
Case #: 00507582

Footcandles calculated at grade

Filename: 711-211004YHNYBAFR2.AGI

Layout By:
Collin Witherow
Date:8/25/2022

Scale 1" = 16'
0 32 64

BIG RED ROOSTER FLOW

PROJECT LOCATION:

3451 Crompond Rd,
Cortlandt Manor, NY 10567

PROJECT OVERVIEW:

- A Canopy Visuals
- B Dispenser Visuals
- C Main ID Visuals
- D Amenity Bin / Paint Visuals

EXISTING

PROPOSED

approval signature
I have reviewed the visuals within this document and I approve the designs and scope of work listed within.

THIS IS NOT AN INSTALLATION GUIDE

Permit Pack

Facility #	Date	Customer	Created by	Revision #	Page #
92037067	08_10_2022	SEI FUEL SERVICES INC.	B. DAHMEN	R1	1 OF 13

BIG RED ROOSTER FLOW
2 Northfield Plaza, Ste 250
Northfield, IL 60093
P: (847) 441-1818 F: (847) 592-9564

This document reflects trade secrets and confidential business information. It may not be copied, published or disseminated in any manner without the written approval of Big Red Rooster Flow. All rights reserved, including patent, trademark and copyrights.

Ⓐ Canopy Visuals

Overhead Map **D - MID**

Perspective View

Elevation 1 ILLUMINATED

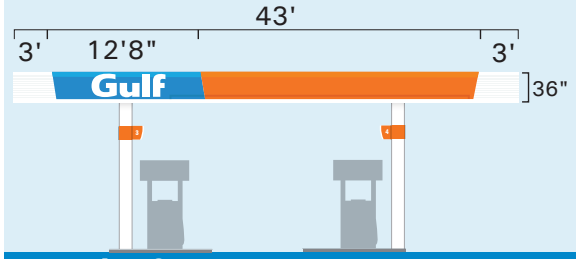

Elevation 2 ILLUMINATED

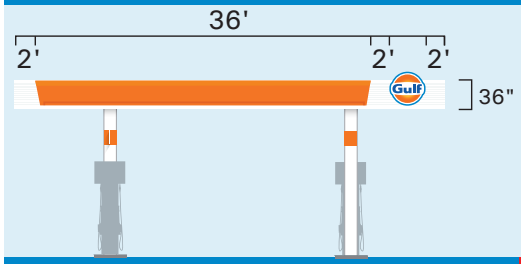

Existing Fascia:	36"
Proposed:	36"

Street side

Elevation 3 STRIPED WHITE ACM

Distance from the building to the nearest edge of canopy: TBD'

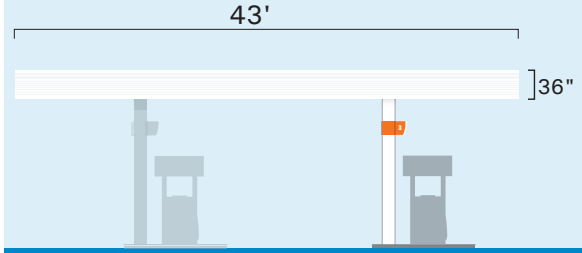

Elevation 4 ILLUMINATED

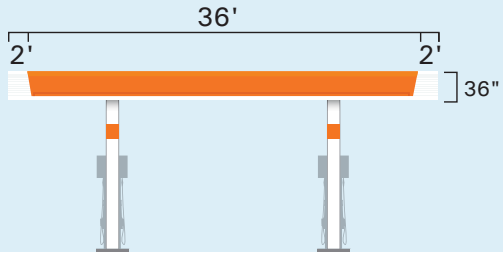

Street side

THIS IS NOT AN INSTALLATION GUIDE

Permit Pack

Facility #	Date	Customer	Created by	Revision #	Page #
92037067	08_10_2022	SEI FUEL SERVICES INC.	B. DAHMEN	R1	2 OF 13

BIG RED ROOSTER FLOW
2 Northfield Plaza, Ste 250
Northfield, IL 60093
P: (847) 441-1818 F: (847) 592-9564

This document reflects trade secrets and confidential business information. It may not be copied, published or disseminated in any manner without the written approval of Big Red Rooster Flow. All rights reserved, including patent, trademark and copyrights.

Ⓐ Gulf Word Mark

Quantity:	1	Total SF:	14.96 SF	Fascia Height:	36"

36" high canopy fascia with small word mark sign elevation

Scale: 1/4" = 1' - 0"

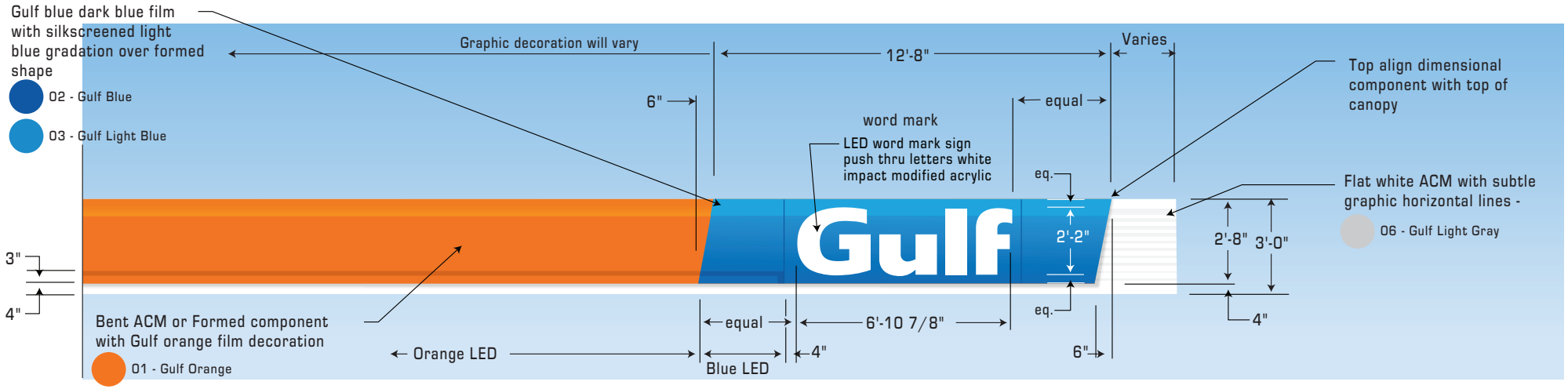

****Right handed canopy shown, left handed canopy would mirror these guidelines****

32" high canopy fascia component with small word mark sign elevation

Scale: 1" = 1' - 0"

Section thru sign

Scale: 1" = 1' - 0"

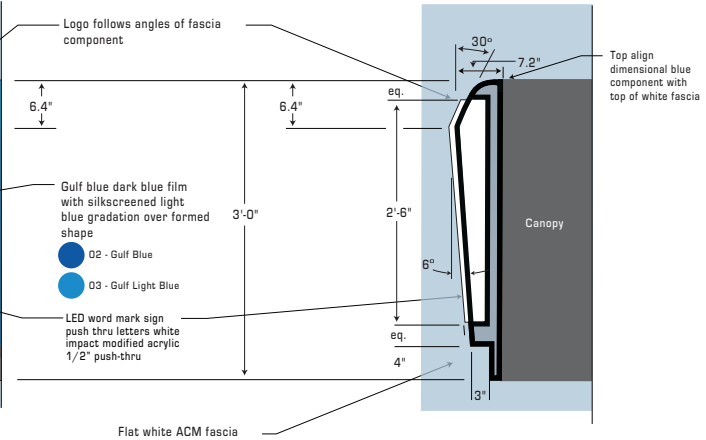

THIS IS NOT AN INSTALLATION GUIDE

Permit Pack

Facility #	Date	Customer	Created by	Revision #	Page #
92037067	08_10_2022	SEI FUEL SERVICES INC.	B. DAHMEN	R1	3 OF 13

BIG RED ROOSTER FLOW
2 Northfield Plaza, Ste 250
Northfield, IL 60093
P: (847) 441-1818 F: (847) 592-9564

This document reflects trade secrets and confidential business information. It may not be copied, published or disseminated in any manner without the written approval of Big Red Rooster Flow. All rights reserved, including patent, trademark and copyrights.

Ⓐ Gulf Disc

42" DISC disc sign elevation

Scale: 1" = 1' - 0"

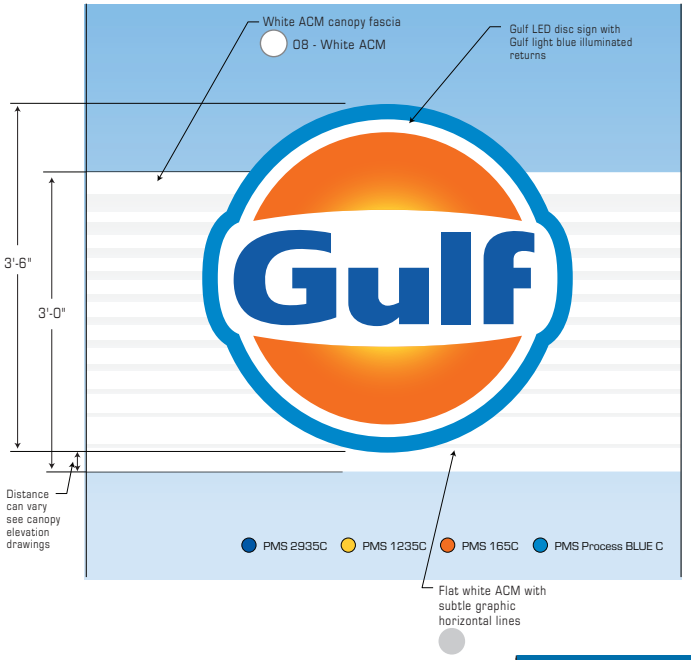

Side Elev

Scale: 1" = 1' - 0"

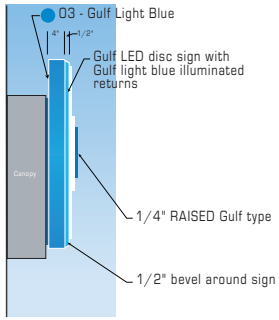

Quantity:	1
Total SF:	19.24
Fascia Height:	36"

Emboss canopy disc sign elevation

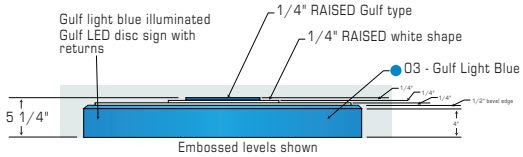

Right Handed Primary Street Application | 36" Fascia - Gulf Disc Sign Options - 42", 36"

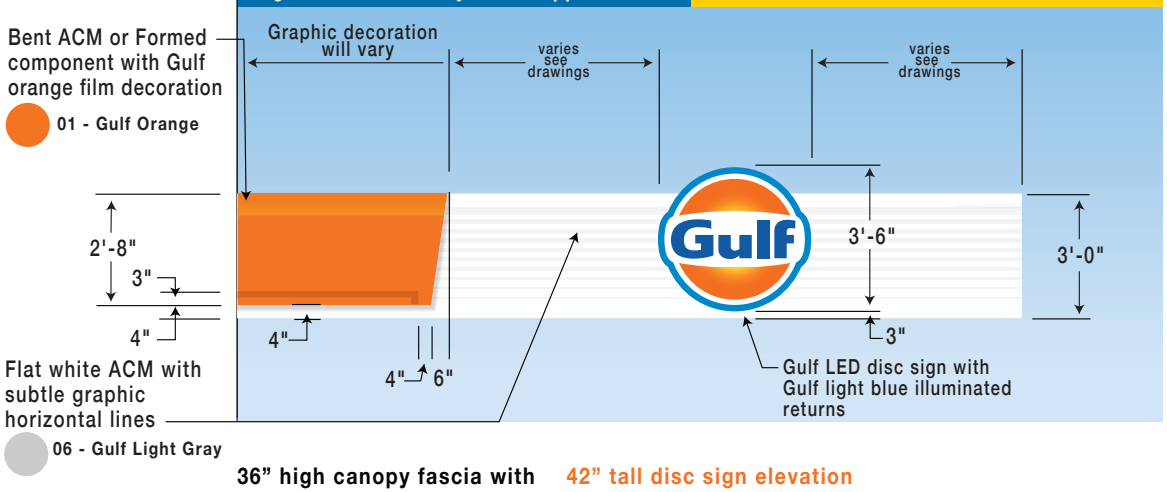

36" high canopy fascia with 42" tall disc sign elevation

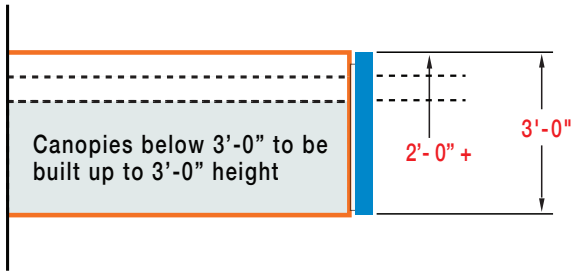

Ⓕ **Fascia Heights below 3'-0"**

THIS IS NOT AN INSTALLATION GUIDE

Permit Pack

Facility #	Date	Customer	Created by	Revision #	Page #
92037067	08_10_2022	SEI FUEL SERVICES INC.	B. DAHMEN	R1	4 OF 13

BIG RED ROOSTER FLOW
2 Northfield Plaza, Ste 250
Northfield, IL 60093
P: (847) 441-1818 F: (847) 592-9564

This document reflects trade secrets and confidential business information. It may not be copied, published or disseminated in any manner without the written approval of Big Red Rooster Flow. All rights reserved, including patent, trademark and copyrights.

Ⓐ Column / Clearance Visuals

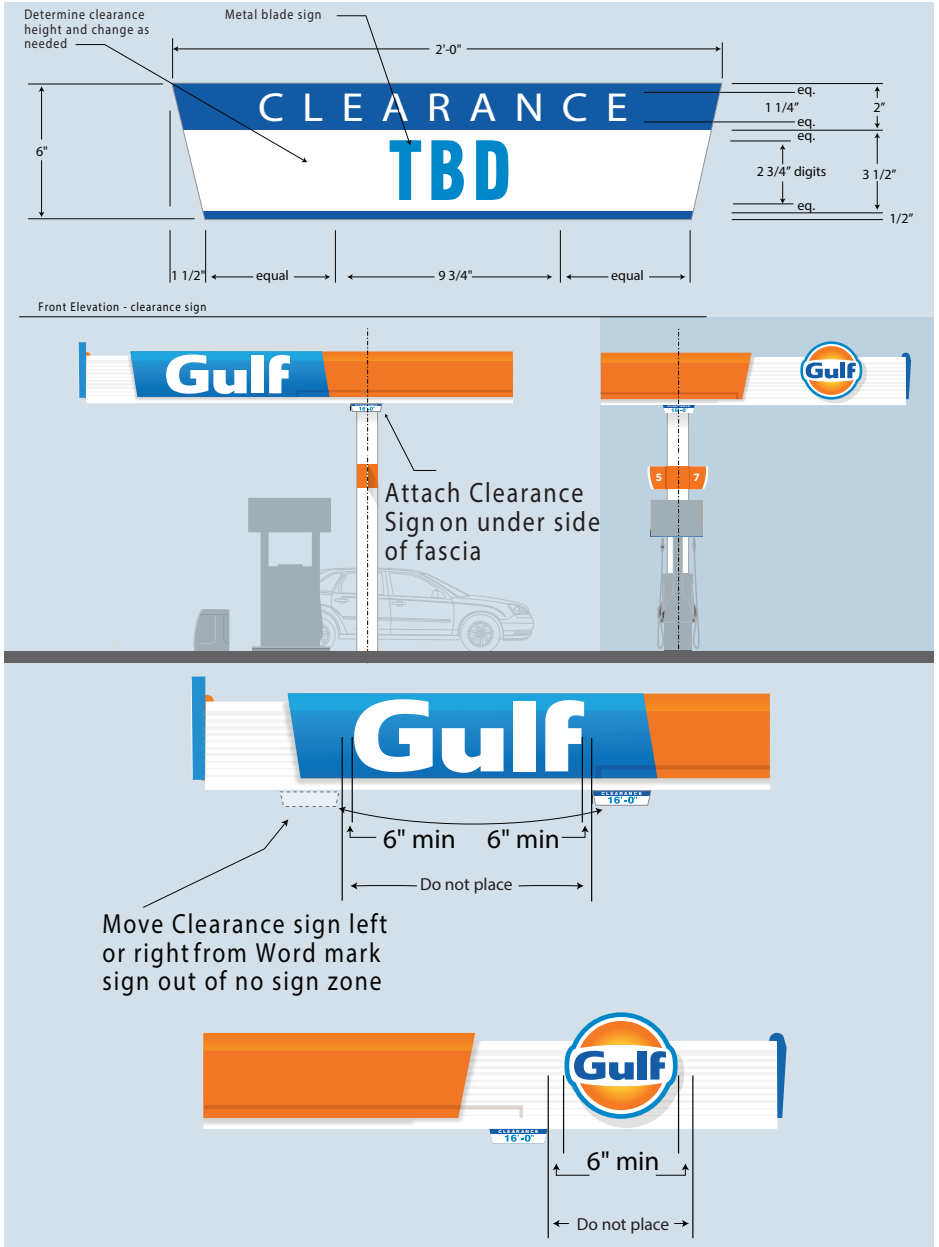

Canopy Clearance Sign should be positioned in the most visible sightlines for consumers entering the forecourt.

Align off column as first priority. If that location does not provide adequate visibility, move to a position that does.

Do not position Clearance sign under a Gulf word mark sign or Gulf disc sign. Follow rules established on this sheet

(2) Clearance signs are typically used per canopy. If more are needed, seek approval from Gulf reimage team

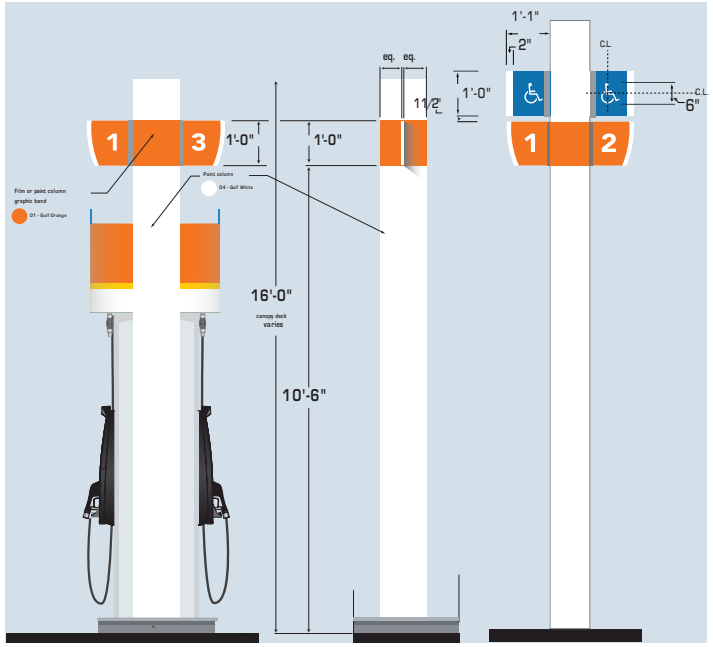

9'-8" is a min height to lower blade signs if obstructions above force blade signs down on column

Column blade signs are intended to be installed with best view from the cashier area.

Each column to be measured from the grade to the bottom of the blade.

Towel dispensers and old decals that are not approved by Gulf should be removed from canopy columns and given to the dealer/site management should they want to keep them OR disposed of in installer supplied dumpsters.

Fire extinguisher cabinets should be removed prior to painting the canopy columns and reinstalled after painting the columns.

Columns with Cladding will need special hardware for install.

THIS IS NOT AN INSTALLATION GUIDE

Permit Pack

Facility #	Date	Customer	Created by	Revision #	Page #
92037067	08_10_2022	SEI FUEL SERVICES INC.	B. DAHMEN	R1	5 OF 13

BIG RED ROOSTER FLOW
2 Northfield Plaza, Ste 250
Northfield, IL 60093
P: (847) 441-1818 F: (847) 592-9564

This document reflects trade secrets and confidential business information. It may not be copied, published or disseminated in any manner without the written approval of Big Red Rooster Flow. All rights reserved, including patent, trademark and copyrights.

B Dispenser Visuals

State/local regulatory messages are the responsibility of Gulf Oil's dealer/distributor

*While reimaging the dispensers, if the weights and measures labels have to be altered please remove them and place them on a 8.5"x11" paper and hand deliver to a store representative. Ask the store representative to call the listed number for a new test.

*Wayne Ovation 2 dispensers will receive column warning decals.

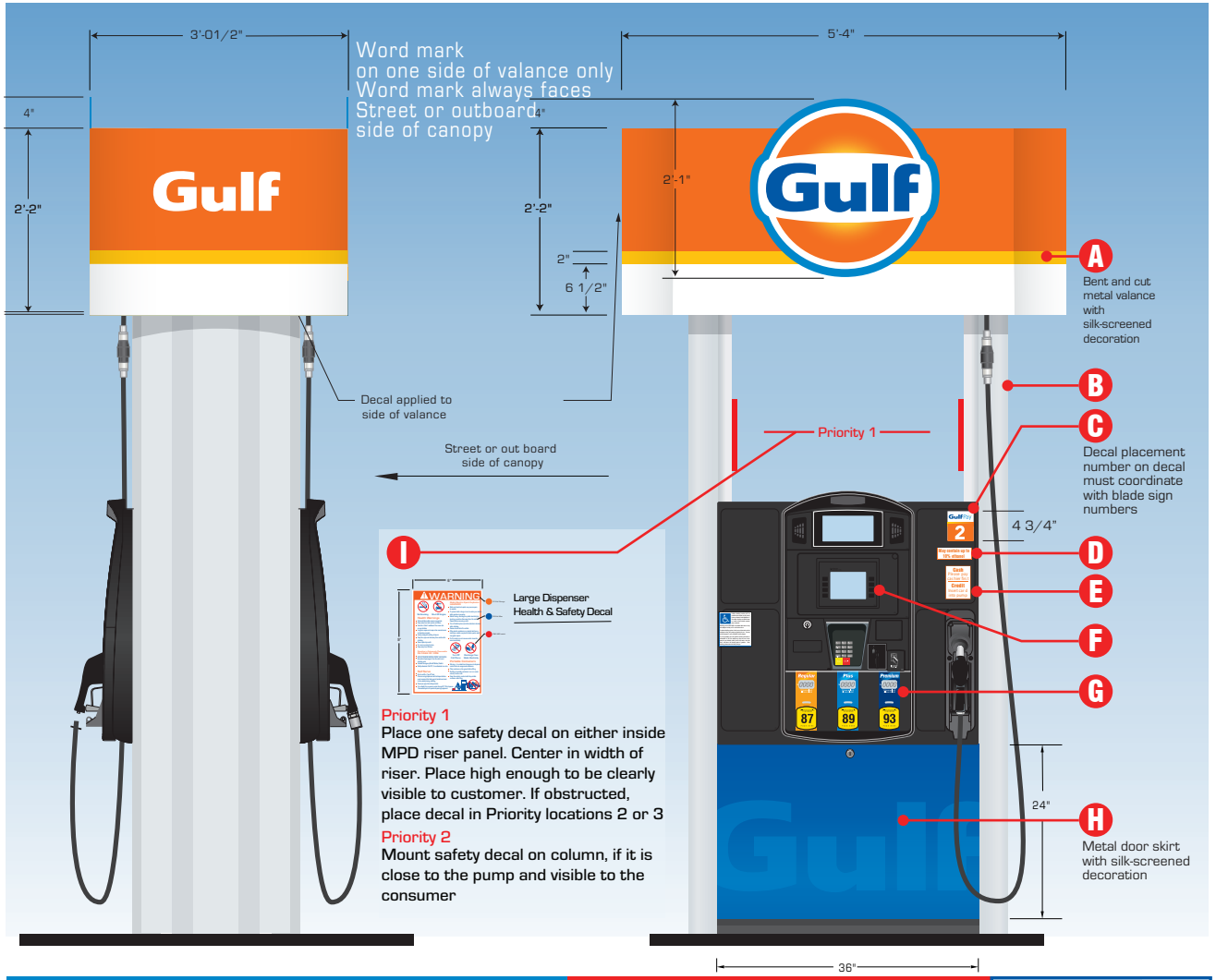

A ■ Install Valance
- ■ Standard
- ☐ Flat End
- ☐ 16" Tall
- ☐ 10" Tall
- ☐ Contained logo
- ☐ No logo

B ■ Install New Riser
if damaged or not silver

C ■ Install Number Decal
- ■ Gulf Pay
- ☐ No Gulf Pay

D ■ Install Ethanol Decal
- ■ Standard 10%
- ☐ CA 10%
- ☐ MA Decal
- ☐ DE Decal
- ☐ No Ethanol

E ■ Install Cash/Credit Decal

F ■ Polycarbonate Areas
must be gulf approved colors:
--Black or Silver
- ■ Install New Polycarb Overlays
- ☐ Paint Crind Area

G ■ Install Octane Decals
- ■ 87
- ■ 89
- ☐ 91
- ■ 93
- ☐ Diesel

H ■ Install Door Skin
- ■ Branded
- ☐ Unbranded

I ■ Install Warning Decal
- ■ Standard (Priority 1)
- ☐ Column (Priority 2)

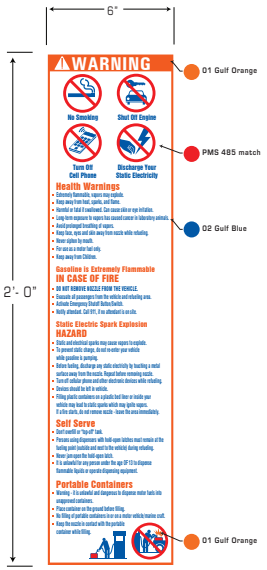

Proposed Existing	Gilbarco Encore 700 S 3+0	Quantity: 2	Existing	Column Decal Graphic

THIS IS NOT AN INSTALLATION GUIDE

Permit Pack

Facility #	Date	Customer	Created by	Revision #	Page #
92037067	08_10_2022	SEI FUEL SERVICES INC.	B. DAHMEN	R1	6 OF 13

BIG RED ROOSTER FLOW
2 Northfield Plaza, Ste 250
Northfield, IL 60093
P: (847) 441-1818 F: (847) 592-9564

This document reflects trade secrets and confidential business information. It may not be copied, published or disseminated in any manner without the written approval of Big Red Rooster Flow. All rights reserved, including patent, trademark and copyrights.

B Dispenser Visuals

State/local regulatory messages are the responsibility of Gulf Oil's dealer/distributor

*While reimaging the dispensers, if the weights and measures labels have to be altered please remove them and place them on a 8.5"x11" paper and hand deliver to a store representative. Ask the store representative to call the listed number for a new test.

*Wayne Ovation 2 dispensers will receive column warning decals.

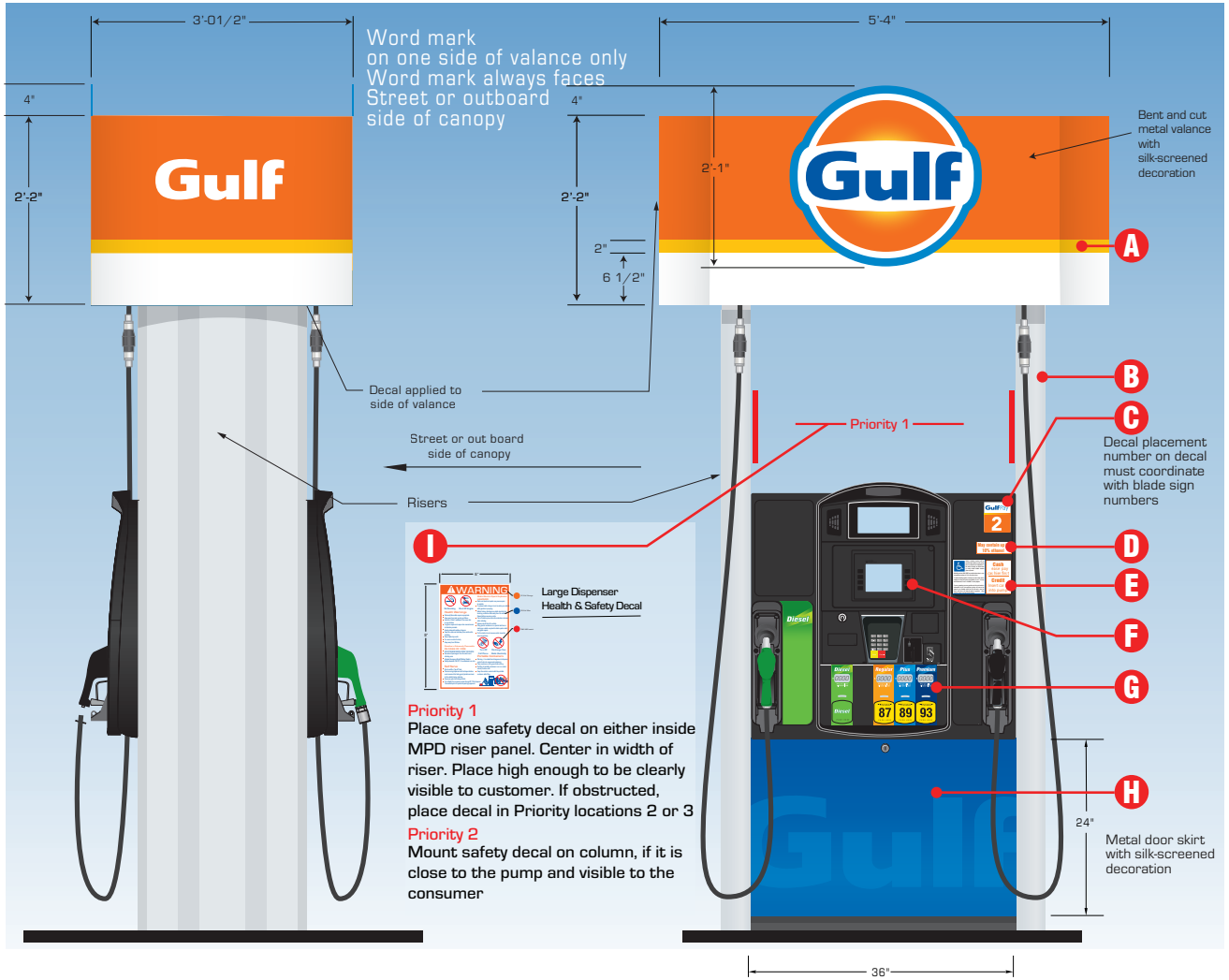

A ■ Install Valance
- ■ Standard
- ☐ Flat End
- ☐ 16" Tall
- ☐ 10" Tall
- ☐ Contained logo
- ☐ No logo

B ■ Install New Riser
if damaged or not silver

C ■ Install Number Decal
- ■ Gulf Pay
- ☐ No Gulf Pay

D ■ Install Ethanol Decal
- ■ Standard 10%
- ☐ CA 10%
- ☐ MA Decal
- ☐ DE Decal
- ☐ No Ethanol

E ■ Install Cash/Credit Decal

F ■ Polycarbonate Areas
must be gulf approved colors:
--Black or Silver
- ■ Install New Polycarb Overlays
- ☐ Paint Crind Area

G ■ Install Octane Decals
- ■ 87
- ■ 89
- ☐ 91
- ■ 93
- ■ Diesel

H ■ Install Door Skin
- ■ Branded
- ☐ Unbranded

I ■ Install Warning Decal
- ■ Standard (Priority 1)
- ☐ Column (Priority 2)

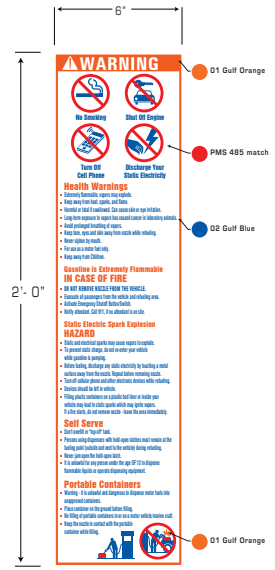

Proposed Existing	Gilbarco Encore 700 S 3+1	Quantity: 1	Existing	Column Decal Graphic

THIS IS NOT AN INSTALLATION GUIDE

Permit Pack

Facility #	Date	Customer	Created by	Revision #	Page #
92037067	08_10_2022	SEI FUEL SERVICES INC.	B. DAHMEN	R1	7 OF 13

BIG RED ROOSTER FLOW
2 Northfield Plaza, Ste 250
Northfield, IL 60093
P: (847) 441-1818 F: (847) 592-9564

This document reflects trade secrets and confidential business information. It may not be copied, published or disseminated in any manner without the written approval of Big Red Rooster Flow. All rights reserved, including patent, trademark and copyrights.

Ⓒ MID Sign Visuals

Existing SF:	32 SF
Proposed SF:	32 SF

EXISTING MAIN ID SIGN (32 SF)
Gulf Cabinet = 48" x 48" = 16 SF
Price Cabinet = 48" x 48" = 16 SF

Existing

Ⓑ **PROPOSED MAIN ID SIGN (32 SF)**
Gulf Cabinet = 48" x 48" = 16 SF
Price Cabinet = 48" x 48" = 16 SF

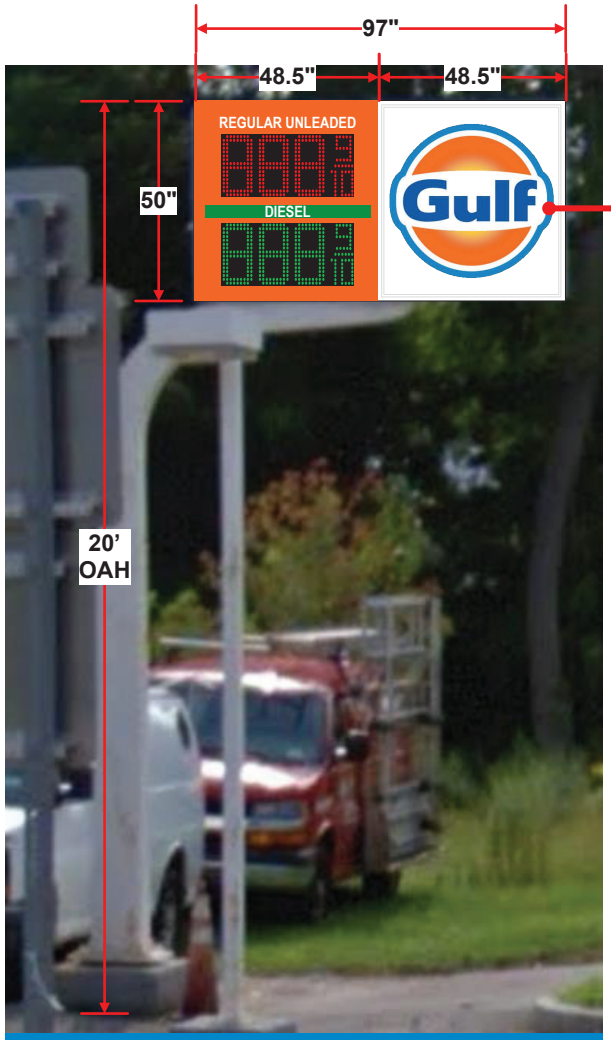

NEW CABINET WITH NEW GULF FACES AND PRICE FACES WITH PWM 12" PRICE DIGITS

Proposed : REFACE

THIS IS NOT AN INSTALLATION GUIDE

Permit Pack

Facility #	Date	Customer	Created by	Revision #	Page #
92037067	08_10_2022	SEI FUEL SERVICES INC.	B. DAHMEN	R1	8 OF 13

BIG RED ROOSTER FLOW
2 Northfield Plaza, Ste 250
Northfield, IL 60093
P: (847) 441-1818 F: (847) 592-9564

This document reflects trade secrets and confidential business information. It may not be copied, published or disseminated in any manner without the written approval of Big Red Rooster Flow. All rights reserved, including patent, trademark and copyrights.

Ⓓ Amenity Bin Visuals

C-Store Front Entrance

Quantity: 1

42-gallon Waste Container with Ashtray Dome Lid
- Includes (1) 42-gallon Waste Container with Dome Lid, (1) Aluminum Ashtray and (1) Liner
- Manufactured from durable, long lasting recycled polyethylene – won't dent, chip and graffiti resistant
- Unit size: 42.25"H x 18.5" Sq., 25 lbs.
- Color: Gray
- Item #73300399

Carton sizes – Ships in 3 cartons
- 42-gallon WC 19" x 20" x 35", 21 lbs.
- Ashtray Dome Lid 19" x 19" x 16", 11 lbs.
- Liner: 15" x 16" x 33", 13 lbs.

Forecourt Pump Island

Quantity: 3

Aruba 3 Waste/Windshield Service Center, Single-sided
- Includes (1) 42-gallon Waste Container, (1) WSC Side Pod, (1) Squeegee, (1) Liner, Hardware Bag, Pre-drilled holes in unit for easy assembly
- Manufactured from durable, long lasting recycled polyethylene – won't dent, chip and graffiti resistant
- Unit size: 34.5"H x 18"W x 25.5"L, 39 lbs.
- Color: Gray
- Item #759303

Carton size – Ships in 1 carton:
- Aruba 3 WC 19" x 20" x 35", 21 lbs.

Note: Liner and WSC Side Pod ship inside the unit

Forecourt Pump Island

Quantity: 0

Aruba 4 Waste/Windshield Service Center, Double-sided
- Includes (1) 42-gallon Waste Container, (2) WSC Side Pod, (2) Squeegees, (1) Liner, Hardware Bag, Pre-drilled holes in unit for easy assembly
- Manufactured from durable, long lasting recycled polyethylene – won't dent, chip and graffiti resistant
- Unit size: 34.5"H x 18"W x 36"L, 49 lbs.
- Color: Gray
- Item #75930399

Carton sizes – Ships in 2 cartons:
- Aruba 3 Single-sided WC 19" x 20" x 35", 21 lbs.

Note: Liner and WSC Side Pod ship inside the unit
- 2nd Cove Isle WSC: 8" x 15" x 33", 13 lbs.

THIS IS NOT AN INSTALLATION GUIDE

Permit Pack

Facility #	Date	Customer	Created by	Revision #	Page #
92037067	08_10_2022	SEI FUEL SERVICES INC.	B. DAHMEN	R1	9 OF 13

BIG RED ROOSTER FLOW
2 Northfield Plaza, Ste 250
Northfield, IL 60093
P: (847) 441-1818 F: (847) 592-9564

This document reflects trade secrets and confidential business information. It may not be copied, published or disseminated in any manner without the written approval of Big Red Rooster Flow. All rights reserved, including patent, trademark and copyrights.

D P.O.P Visuals

Double Sided Snap Frame

Quantity: 1

Double Sided Snap Frame Description:

- Double sided snap frame should be installed on light pole or pole with best visibility. Do NOT install on MID pole.
- Installation instructions are available on the Gulf Installer portal
- Pump topper hardware is provided by BRRF. Marketing material inserts will be provided by Gulf.

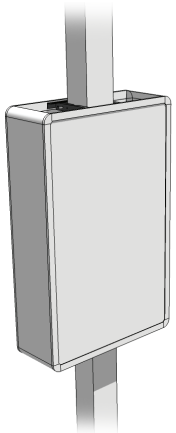

Single Sided Snap Frame

Quantity: 0

Single Sided Snap Frame Description:

- Single sided snap frame can be installed on building or on visible pole. Do NOT install on MID pole.
- POP Installation instructions are available on the Gulf Installer portal
- Pump topper hardware is provided by BRRF. Marketing material inserts will be provided by Gulf.

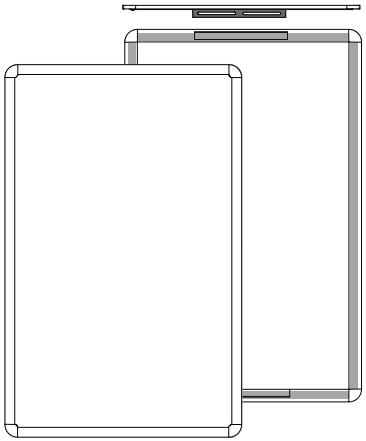

Inverted Pump Topper

Quantity: 3

Inverted Pump Topper Description:

- Pump toppers should be installed inverted under bonnet of each dispenser on site – Only Gas dispensers will receive this or 3+1's. Like GulfPay.
- Installation instructions are available on the Gulf Installer portal
- Pump topper hardware is provided by BRRF. Marketing material inserts will be provided by Gulf.

- New inverted pump toppers are a requirement to be compliant with the Gulf brand standards.

Pump Topper Pricer

Quantity: 0

- Not all sites require pump topper pricers. Please check your city/state requirements.
- If your site has pump topper pricers, pump topper fuel grades will need to match the dispenser fuel grades to comply with Gulf standards.

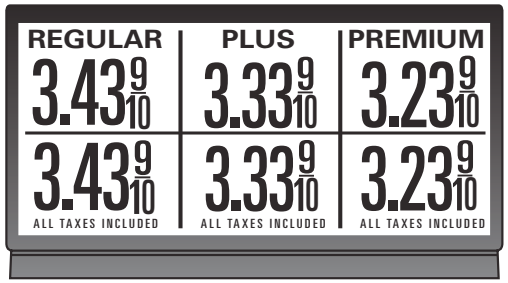

- Note: Visual purposes only.

THIS IS NOT AN INSTALLATION GUIDE

Permit Pack

Facility #	Date	Customer	Created by	Revision #	Page #
92037067	08_10_2022	SEI FUEL SERVICES INC.	B. DAHMEN	R1	10 OF 13

BIG RED ROOSTER FLOW
2 Northfield Plaza, Ste 250
Northfield, IL 60093
P: (847) 441-1818 F: (847) 592-9564

This document reflects trade secrets and confidential business information. It may not be copied, published or disseminated in any manner without the written approval of Big Red Rooster Flow. All rights reserved, including patent, trademark and copyrights.

Ⓓ Paint Visuals

Bollards (UNDER CANOPY/ON FUEL ISLAND)

Quantity: TBD

Paint bollards 50/50: 03 - Gulf Light Blue (TOP HALF)
06 - Gulf Light Gray (BOTTOM HALF)

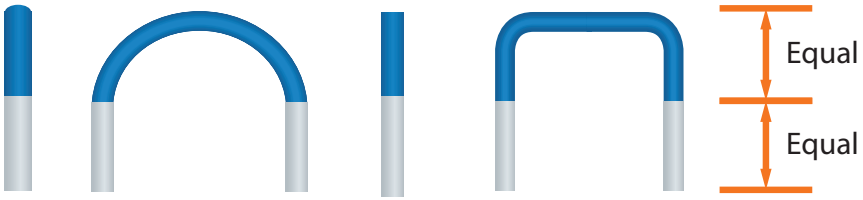

Paint Bollards 06 - Gulf Light Gray
(NOT UNDER CANOPY)

Quantity: 0

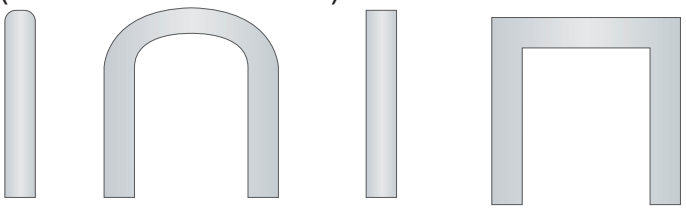

Bollards that are NOT under the fuel island canopy on site should be painted in one color (Gulf Light Gray), unless the finish is stainless steel.

Do not paint stainless steel

Quantity: 0

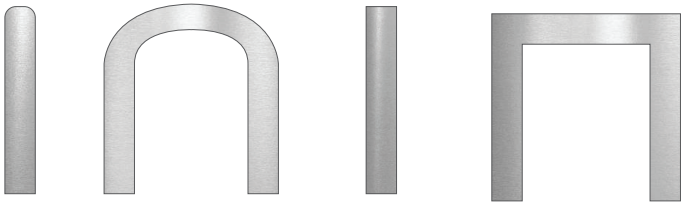

Islands

Paint curbs: 07 - Gulf Dark Gray

Do not paint stainless steel

Columns

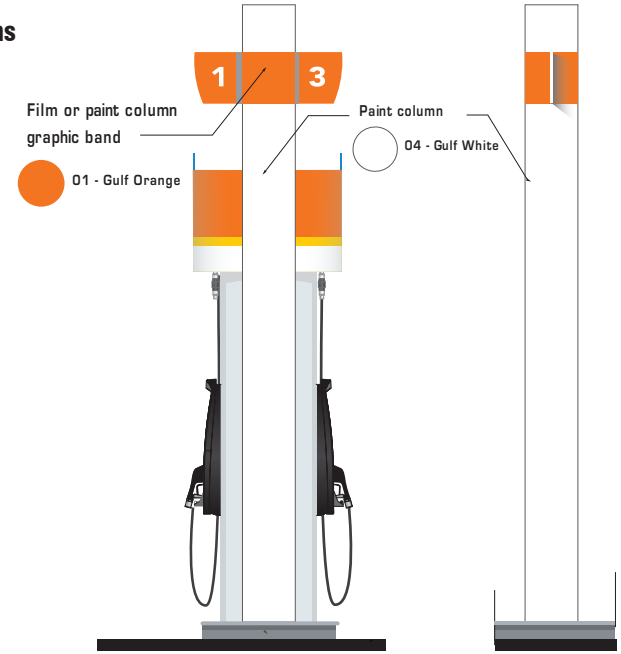

Light Poles Do not paint stainless steel

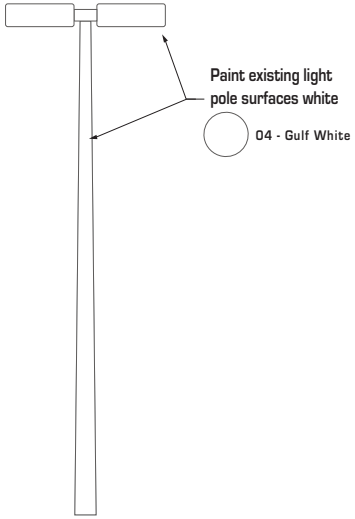

Vent Pipes Do not paint stainless steel

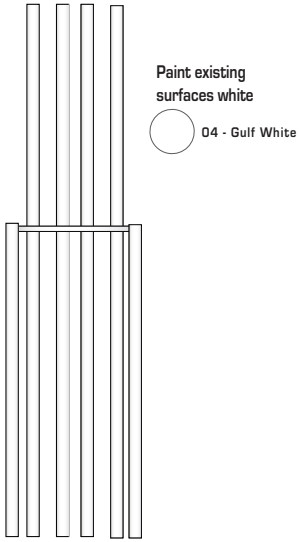

THIS IS NOT AN INSTALLATION GUIDE

Permit Pack

Facility #	Date	Customer	Created by	Revision #	Page #
92037067	08_10_2022	SEI FUEL SERVICES INC.	B. DAHMEN	R1	11 OF 13

BIG RED ROOSTER FLOW
2 Northfield Plaza, Ste 250
Northfield, IL 60093
P: (847) 441-1818 F: (847) 592-9564

This document reflects trade secrets and confidential business information. It may not be copied, published or disseminated in any manner without the written approval of Big Red Rooster Flow. All rights reserved, including patent, trademark and copyrights.

D Paint Visuals

01 - Gulf Orange PMS 165 C
Forecourt: Fascia Component, Dispenser Valance, Blade Signs
3M Bright Orange -180 MC 14
Sherwin Williams Custom Color - Paint Spec. Paint Finish - Semi Gloss

02 - Gulf Blue PMS 2935 C
Forecourt: Fascia Component, Dispenser Valance, Dispenser Skirt
3M Film Intense Blue 180 - 47
Sherwin Williams Custom Color - Paint Spec. Paint Finish - Semi Gloss

03 - Gulf Light Blue PMS Process BLUE C
Forecourt: Dispenser Skirt, Top of Bollard
3M Film Olympic Blue 180 - 57
Sherwin Williams Custom Color - Paint Spec.Paint Finish - Semi Gloss

04 - Gulf White - Paint
Forecourt: Columns, Dispenser Valance, Blade Signs
Sherwin Williams - Snow Bound SW-7004 White. Paint Finish - Satin

05 - Gulf Yellow PMS 1235 C
Forecourt: Fascia Component, Dispenser Valance, MID
3M Film Sunflower yellow 3650-25
Sherwin Williams Custom Color - Paint SpecPaint Finish - Semi Gloss

06 - Gulf Light Gray
Forecourt: Bollard lower section
Sherwin Williams - Argos SW7065 -Paint Finish - Semi Gloss

07 - Gulf Dark Gray
Forecourt: Curb Paint
Sherwin Williams - City Scape - SW -7067 Paint Finish - Satin

08 - White ACM
Forecourt: Fascia of Canopy
Reynobond Duragloss 3000 bright white or Eastman White or equal

09 - Gulf White Canopy Deck - Paint
Forecourt: Canopy Deck
Sherwin Williams - Extra White SW-7006 White Paint Finish - Semi Gloss

10 - Gulf Gray
Forecourt: Canopy Fascia Lines
Custom Mix from LSI - Semi Gloss

11 - Gulf Diesel Green PMS match 355
Forecourt: All Diesel applications,
Dispensers, MID

Wainscot Gray
Sherwin Williams
7016 Mindful Gray

THIS IS NOT AN INSTALLATION GUIDE

Permit Pack

Facility #	Date	Customer	Created by	Revision #	Page #
92037067	08_10_2022	SEI FUEL SERVICES INC.	B. DAHMEN	R1	12 OF 13

BIG RED ROOSTER FLOW
2 Northfield Plaza, Ste 250
Northfield, IL 60093
P: (847) 441-1818 F: (847) 592-9564

This document reflects trade secrets and confidential business information. It may not be copied, published or disseminated in any manner without the written approval of Big Red Rooster Flow. All rights reserved, including patent, trademark and copyrights.

D Paint Visuals

INT/EXT ARCHITECTURAL
SHER-CRYL HPA ACRYLIC
SEMI-GLOSS FM 8000DE
GULF OIL ORANGE
CUSTOM MANUAL MATCH
CCE*COLORANT OZ 32 64 128
R4-New Red 2 36 1 1
Y1-Yellow 4 25 1 -
W1-White - 38 1 -
ONE GALLON VIVID YELLOW
B66T00357 650995392
ORANGE
APPROVED
Non Returnable Tinted Color
CAUTION: To assure consistent color, always order enough paint to complete the job and intermix all containers of the same color before application. Mixed colors may vary slightly from color strip or color chip.

01 - Gulf Orange

MID poles

Sherwin Williams -
Custom Color Mix
Semi Gloss

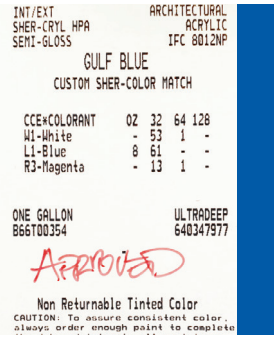
INT/EXT ARCHITECTURAL
SHER-CRYL HPA ACRYLIC
SEMI-GLOSS IFC 8012NP
GULF BLUE
CUSTOM SHER-COLOR MATCH
CCE*COLORANT OZ 32 64 128
W1-White - 53 1 -
L1-Blue 8 61 - -
R3-Magenta - 13 1 -
ONE GALLON ULTRADEEP
B66T00354 640347977
APPROVED
Non Returnable Tinted Color
CAUTION: To assure consistent color, always order enough paint to complete

02 - Gulf Blue

Forecourt: Presently not used
Sherwin Williams -
Custom Color Mix
Paint Finish - Semi Gloss

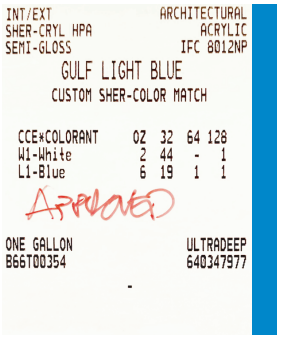
INT/EXT ARCHITECTURAL
SHER-CRYL HPA ACRYLIC
SEMI-GLOSS IFC 8012NP
GULF LIGHT BLUE
CUSTOM SHER-COLOR MATCH
CCE*COLORANT OZ 32 64 128
W1-White 2 44 - 1
L1-Blue 6 19 1 1
APPROVED
ONE GALLON ULTRADEEP
B66T00354 640347977

03 - Gulf Light Blue

Forecourt: Top of Bollard

Sherwin Williams -
Custom Color Mix
Semi Gloss

INT/EXT ARCHITECTURAL
PRO INDUSTRIAL MULTI SURF ACRYLIC
EG-SHEL IFC 8012NP
7004 SNOWBOUND
SHER-COLOR FORMULA
Gulf white
CCE*COLORANT OZ 32 64 128
N1-Raw Umber - - 1 1
R3-Magenta - - - 1
Y3-Deep Gold - - 1 -
APPROVED
ONE GALLON EXTRA WHITE
B66W01561 650867591
STUCCO/MASONRY
Non Returnable Tinted Color
CAUTION: To assure consistent color, always order enough paint to complete the job and intermix all containers of the same color before application. Mixed colors may vary slightly from color strip or color chip.

04 - Gulf White - Paint

Forecourt: Columns,
Light Poles, Stacks etc

Sherwin Williams -
Snow Bound SW-7004 White
Satin

INT/EXT IND MAINT
INDUSTRIAL URETHANE ALKYD ENAMEL
GLOSS FM 8000DE
GULF OIL YELLOW(NEW)
CUSTOM MANUAL MATCH
844 COLORANT OZ 32 64 128
MY-Med Yellow 4 32 - -
OY-Yellow - 42 - -
TW-White - 28 - -
UO-Orange - 2 - -
ONE GALLON NEUTRAL
B54T00154 640365730
GULF OIL YELLOW(NEW)
Non Returnable Tinted Color
CAUTION: To assure consistent color, always order enough paint to complete the job and intermix all containers of the same color before application.

05 - Gulf Yellow

MID Band - poles and cabinet

Sherwin Williams -
Custom Color Mix
Semi Gloss

INT/EXT ARCHITECTURAL
PRO INDUSTRIAL MULTI SURF ACRYLIC
EG-SHEL IFC 8012NP
GULF LIGHT GRAY
CUSTOM SHER-COLOR MATCH
CCE*COLORANT OZ 32 64 128
B1-Black - 33 - -
R2-Maroon - 1 - 1
Y3-Deep Gold - 14 - -
ONE GALLON EXTRA WHITE
B66W01561 650867591
?
Non Returnable Tinted Color
CAUTION: To assure consistent color, always order enough paint to complete

06 - Gulf Light Gray

Forecourt: Bollard lower section

Sherwin Williams -
Argos SW7065
Paint Finish - Semi Gloss

INT/EXT ARCHITECTURAL
PRO INDUSTRIAL MULTI SURF ACRYLIC
EG-SHEL IFC 8012NP
GULF DARK GRAY
CUSTOM SHER-COLOR MATCH
CCE*COLORANT OZ 32 64 128
W1-White 8 40 - -
B1-Black 2 41 - -
R2-Maroon - 2 - -
Y3-Deep Gold - 27 - 1
ONE GALLON ULTRADEEP
B66T01564 650867708
APPROVED
Non Returnable Tinted Color
CAUTION: To assure consistent color, always order enough paint to complete the job and intermix all containers of the same color before application.

07 - Gulf Dark Gray

Forecourt: Curb Paint

Sherwin Williams -
City Scape - SW -7067
Paint Finish - Satin

INT/EXT ARCHITECTURAL
PRO INDUSTRIAL MULTI SURF ACRYLIC
EG-SHEL IFC 8012NI
7006 EXTRA WHITE
PACKAGE COLOR
Gulf white
ONE GALLON EXTRA WHIT
B66W01561 65086759
Non Returnable Tinted Color
CAUTION: To assure consistent color always order enough paint to comple the job and intermix all containers of the same color before applicatio Mixed colors may vary slightly from color strip or color chip.

09 - Gulf White Canopy Deck

Forecourt:
Canopy deck

Sherwin Williams -
Extra White SW-7006 White
Paint Finish - Semi Gloss

THIS IS NOT AN INSTALLATION GUIDE

Permit Pack

Facility #	Date	Customer	Created by	Revision #	Page #
92037067	08_10_2022	SEI FUEL SERVICES INC.	B. DAHMEN	R1	13 OF 13

BIG RED ROOSTER FLOW
2 Northfield Plaza, Ste 250
Northfield, IL 60093
P: (847) 441-1818 F: (847) 592-9564

This document reflects trade secrets and confidential business information. It may not be copied, published or disseminated in any manner without the written approval of Big Red Rooster Flow. All rights reserved, including patent, trademark and copyrights.

TB Referral
Volta Charging Stations at Mall

CUDDY +FEDER LLP

445 Hamilton Avenue, 14th Floor
White Plains, New York 10601
T 914 761 1300
F 914 761 5372
cuddyfeder.com

8/25/2022

Kristen Motel
kmotel@cuddyfeder.com

VIA EMAIL
AND HAND DELIVERY
Supervisor Matthew J. Slater
and Members of the Town Board
Town of Yorktown
366 Underhill Avenue and will
Yorktown Heights, NY 10598

Re: Volta Electric Vehicle Charging Stations
Site Plan Application
Premises: Jefferson Valley Mall, 650 Lee Blvd., Yorktown, New York

Dear Supervisor Slater and Members of the Town Board:

This letter and enclosed materials are respectfully submitted on behalf of Volta Charging, LLC ("Volta"), in support of its site plan application for the proposed installation of electric vehicle ("EV") charging stations at the Jefferson Valley Mall ("Mall") located at 650 Lee Boulevard in the Town of Yorktown, New York.

As the Board is aware, Volta is a publicly traded company that operates the most utilized EV charging network in the United States. By adopting a consumer-focused approach that offers free (Level 2) or subsidized (DC Fast) charging supported by sponsored content, Volta is accelerating State and Federal objectives to support low cost and large-scale EV deployment at convenient locations. Volta partners with large retailers across the Northeast to install publicly available EV infrastructure, which encourages consumer adoption of electric vehicles with net reductions in carbon emissions.

The Mall and Volta's Proposed Installation

This site plan application involves a limited request by Volta to install EV charging stations in the parking lot of the Jefferson Valley Mall. The Mall is currently classified within the Commercial Regional Center ("CRC") Zoning District and is situated on the northeasterly side of Lee Boulevard and the southerly side of Route 6.

Volta is proposing to install four (4) EV Level 2 charging stations with display screens on existing landscaped islands. Two (2) of the electric vehicle spaces will be located in the northern parking lot and two (2) will be located in the southern parking lot, all of which will be nearest to the respective Mall entrances to target pedestrian traffic.

Compliance with Zoning Code Standards

On April 19th, the Town Board adopted zoning text amendments to permit display screens on EV charging stations as an accessory use in the CRC Zoning District subject to specific bulk, design, and visibility requirements. See **Exhibit C** – Town of Yorktown Local Law No. 4 of 2022; Town of Yorktown Zoning Code ("Zoning Code") §§ 300-21.C(7)(b)(4), 300-193.2.A.

As demonstrated on the enclosed Site Drawings, prepared by Kimley-Horn P.C., dated April 1, 2021, last revised June 8, 2021 ("Site Drawings"), the proposed EV charging stations will comply with the following criteria enumerated Section 300-193.2.A of the Zoning Code:

1. The EV charging station equipment will not exceed 7.5' in height or 3' in width. Each station is approximately 7.1' tall and 1.3' wide.
2. The EV charging station display screens will not exceed 9 square feet.
3. The EV charging stations will consist of two screens, one on each side of the station equipment.
4. The EV charging station displays will contain static images and will be equipped with an auto-dimming feature.
5. The EV charging station displays will limit content refresh rates to no less than every 8 seconds.
6. The EV charging station displays will not contain video or sound.

In accordance with Zoning Code Section 300-84, the design and location of the EV charging stations will be in harmony with the Mall property and not have a detrimental effect on the surrounding area. See Enclosed Site Drawings. The location of the stations in the first rows of parking spaces closest to the Mall entrances—approximately 330' from Lee Boulevard and 300' from Route 6—avoids off-site visibility and will have no impact on vehicular traffic. Of note, the EV charging stations will not result in any changes to the existing traffic circulation patterns within the Mall.

Consistency with Yorktown Policies and Objectives

In accordance with the Town of Yorktown 2010 Comprehensive Plan ("2010 Comprehensive Plan"), the installation of EV charging stations will promote and support sustainable transportation options for Yorktown's citizens and visitors to commercial businesses while also facilitating emissions reduction.[1] Moreover, Volta's stations will offer the amenity of free and subsidized charging to shopping center patrons, which encourages the success of the Mall businesses,[2] promotes economic growth and encourages business opportunities within this commercial district.[3] The EV charging stations are specifically designed to ensure that they will be compatible with surrounding land uses. It is respectfully submitted that the proposed EV charging stations are consistent with the public health, safety, morals and general welfare of the community.

[1] See 2010 Comprehensive Plan, pgs. 3-10, 3-23, 4-2, 4-3.
[2] See 2010 Comprehensive Plan, pgs. 4-2.
[3] See 2010 Comprehensive Plan, pgs. 4-2, 4-3, 4-28.

Environmental Review

The installation of the EV charging stations constitute a Type II action that is exempt from the State Environmental Quality Review Act. See 6 NYCRR §§ 617.5(c)(9), (13). Nonetheless, a Short Environmental Assessment Form has been included in this application and is enclosed as **Exhibit B**.

Conclusion

For the reasons set forth above, and as will be further discussed at the public hearing on this matter, the proposed EV charging stations comply with the applicable bulk, design, and visibility requirements, as well as local policies and objectives, and the Applicant respectfully requests approval of the site plan.

Materials Enclosed

In support of the proposed amendments, enclosed please find seven (7) copies of the following materials:

Exhibit A: Site Plan Application;

Exhibit B: Short Environmental Assessment Form; and

Exhibit C: Town of Yorktown Local Law No. 4 of 2022.

Also enclosed are Site Plans prepared by Kimley-Horn, P.C. dated April 1, 2021, last revised June 8, 2021, and a check for $3,938.00 made payable to the Town of Yorktown representing the site plan application fee.

We respectfully request that this matter be placed on the Town Board's next available meeting Agenda. Should the Board or Town Staff have any questions regarding the enclosed, please do not hesitate to contact us. Thank you in advance for your consideration in this regard.

Sincerely,

Kristen Motel
Enclosures
cc: John A. Tegeder, R.A., Yorktown Director of Planning
Robyn A. Steinberg, AICP, CPESC, Town Planner
Volta Charging, LLC
Kimley-Horn, P.C.
Allison Fausner, Esq.

EXHIBIT A

TOWN OF YORKTOWN
TOWN BOARD

Yorktown Town Hall, 363 Underhill Avenue, Yorktown Heights, New York 10598, Phone (914) 962-5722, Fax (914) 962-6591

APPLICATION FOR SITE PLAN APPROVAL
Pursuant to Town of Yorktown Town Code Chapter 300
Article VII Permitted Special Uses or Article VIII Special Districts

Date _____

1. **Name of Project:** Jefferson Valley Mall

2. **Location: (Section-Block-Lot)** 16.12-1-24

   Street Address or Adjacent Street: 650 Lee Blvd, Yorktown Heights, NY 10598

3. **Zone:** CRC **Total Acreage:** 38.76

4. **Is a statement of easements relating to property attached?** ☐ Yes ☒ None exist impacting this application*

5. **Project narrative (brief description of proposed development):**

   Four (4) electric vehicle (EV) charging station fixtures, (2) of which are located at existing curbed island areas and (2) located on a striped island with bollards that are adjacent to on-site parking spaces at the property. The EV fixtures are customary accessory and incidental to the existing commercial use and solely for the benefit of customers visiting the store. The fixtures are located to provide priority parking for patrons with EVs and display visibility along the interior circulation aisle for shoppers. There are no proposed changes to any of the existing traffic circulation at the property.

6. **Contact Person - CHOOSE ONLY ONE:**

   ☐ Applicant ☐ Owner ☐ Architect ☐ Wetland Scientist
   ☑ Attorney ☐ Engineer ☐ Surveyor ☐ Landscape Architect

7. **Applicant**

   Name: Samuel Lee
   Firm: Volta Charging LLC
   Address: 48W 38th Street 12th FL New York, NY 10018
   Phone: (917) 903-6066
   Fax:
   Email: samuel.lee@voltacharging.com

8. **Owner of Record**

   Name: Mall Ground Portfolio, LLC, a Delaware limited liability company
   Firm: c/o Kawa Capital Partners LLC
   Address: 21500 Biscayne Boulevard, Suite 700, Aventura, Florida 33180
   Phone: (305) 560-5216
   Fax: (305) 560-5290
   Email: legal@kawa.com

9. Attorney

Name: Kristen Motel

Firm: Cuddy & Feder LLP

Address: 445 Hamilton Avenue, 14th Floor White Plains, New York 10601

Phone: (914) 761-1300

Fax: _____

Email: KMotel@cuddyfeder.com

10. Engineer

Name: Ryan J. Gram

Firm: Kimley-Horn & Associates, Inc.

Address: 1 N Lexington Ave Suite 505, White Plains, NY 10601

Phone: (914) 368-9200

Fax: _____

Email: Ryan.Gram@kimley-horn.com

Lic. No.: 103169

11. Surveyor

Name: _____

Firm: _____

Address: _____

Phone: _____

Fax: _____

Email: _____

Lic. No.: _____

12. Architect

Name: _____

Firm: _____

Address: _____

Phone: _____

Fax: _____

Email: _____

Lic. No.: _____

13. Wetland Scientist/Specialist

Name _____

Firm _____

Address _____

Phone _____

Fax _____

Email _____

14. Landscape Architect

Name _____

Firm _____

Address _____

Phone _____

Fax _____

Email _____

Lic. No. _____

15. Is this project within 500 feet of the Town line?	☐ Yes	☒ No
16. Is this project within 500 feet of the Putnam County line?	☐ Yes	☒ No
17. Is this project within the Sustainable Development Study Area?	☐ Yes	☒ No
18. Is this project within the NYC DEP Watershed?	☐ Yes	☒ No
If yes, is this project within a Designated Main Street Area?	☐ Yes	☐ No

19. Is this project within 500 feet of:

The right-of-way of any existing or proposed state or county road?	☒ Yes	☐ No
The boundary of an existing or proposed state or county park or any state or county recreation area?	☐ Yes	☒ No
The boundary of state or county-owned land on which a public building/ institution is located?	☒ Yes	☐ No
An existing or proposed county drainage line?	☐ Yes	☒ No
The boundary of a farm located in an agricultural district?	☐ Yes	☒ No

20. Does the entire development plan for this project propose the disturbance of more than 5,000 SF of land? Note: If project is phased, include all phases in determination. ☐ Yes ☒ No

21. This project requires the following permits or approvals from the Town of Yorktown:

☐ Wetland Permit

☐ Stormwater Permit

☐ Tree Permit

☐ Planning Board Special Permit: _____

☐ Town Board Variance or Special Permit: _____

☐ Zoning Board of Appeals Variance or Special Permit: _____

22. This project requires the following permits or approvals from other outside agencies:

- ☐ Westchester County Board of Health
- ☐ NYC DEP
- ☐ NYS DEC
- ☐ Other: _____

23. This parcel is in the following districts:

School District	555401 Lakeland	Water District	Yorktown Consolidated Water District #1
Fire District	Mohegan	Sewer District	Peekskill

A Short or Full EAF with the original signature of the applicant or project sponsor must be attached to this application when submitted.

The applicant agrees to comply with the requirements of the Road Specifications, the Land Use Regulations, Special Permit Requirements, Zoning Ordinance, Lighting Ordinance, Tree Removal and Stormwater Ordinance, and any additions or amendments thereto.

The applicant agrees to execution and delivery of deeds and required documents for reserved open space, drainage control, roads and road widening strips and descriptions of easements at the time of the public hearing. Such execution and delivery shall not operate to vest title of said property in the Town of Yorktown until such dedication is accepted in the form of a resolution adopted by the Town Board at a regular meeting of said Board.

Applicant	Owner of Record
Samuel Lee	Cristina Baldim, authorized officer
NAME (PLEASE PRINT)	NAME (PLEASE PRINT)
Samuel Lee	CBaldim
SIGNATURE	SIGNATURE
05/05/2022	July 25, 2022
DATE	DATE

Note: If the property owner is not the applicant for this application, in addition to the signature above, the owner of the property must also complete and have notarized one of the owner affidavits on the following page.

Note: By signing this document the owner of the subject property grants permission for Town Officials to enter the property for the purpose of reviewing this application.

REFER TO AFFIDAVITS ON THE FOLLOWING PAGES

ONE OF THE FOLLOWING AFFIDAVITS MUST BE COMPLETED

****

AFFIDAVIT TO BE COMPLETED BY OWNER, OTHER THAN CORPORATION

STATE OF NEW YORK; COUNTY OF WESTCHESTER SS. :

_____, being duly sworn, deposes and says that he is the owner in fee of the property described in the foregoing application for consideration of preliminary plat, and that the statements contained therein are true to the best of his knowledge and belief.

_____

Sworn before me this
_____ date of _____, 20 __

_____
Notary Public

****

AFFIDAVIT TO BE COMPLETED BY CORPORATION OWNER

STATE OF FLORIDA; COUNTY OF MIAMI-DADE SS. :

Cristina Baldim, being duly sworn, deposes and says that she resides at 3300 NE 188th St. Apt. 416, Aventura in the County of Miami-Dade and State of Florida. That she is the Authorized Officer of Mall Ground Portfolio, LLC the limited liability company which is owner in fee of the property described in the foregoing application for site plan approval and that the statements contained therein are true to the best of her knowledge and belief.

_____

Sworn before me this
25th date of July, 2022

Katiussi Soares
Notary Public

KATIUSSI SOARES
MY COMMISSION # HH 203449
EXPIRES: November 30, 2025
Bonded Thru Notary Public Underwriters

****

AFFIDAVIT TO BE COMPLETED BY AGENT OF OWNER

STATE OF NEW YORK; COUNTY OF WESTCHESTER SS. :

_____, being duly sworn, deposes and says that he is the agent named in the foregoing application for _____ and that he has been duly authorized by the owner in fee to make such application and that foregoing statements are true to the best of his knowledge and belief.

_____

Sworn before me this
_____ date of _____, 20 __

_____
Notary Public

F:\Office\WordPerfect\APPLICATION FORMS\APPSITEPLANTB.wpd
Last updated: August 2013

EXHIBIT B

Short Environmental Assessment Form
Part 1 - Project Information

Instructions for Completing

Part 1 – Project Information. The applicant or project sponsor is responsible for the completion of Part 1. Responses become part of the application for approval or funding, are subject to public review, and may be subject to further verification. Complete Part 1 based on information currently available. If additional research or investigation would be needed to fully respond to any item, please answer as thoroughly as possible based on current information.

Complete all items in Part 1. You may also provide any additional information which you believe will be needed by or useful to the lead agency; attach additional pages as necessary to supplement any item.

Part 1 – Project and Sponsor Information

Name of Action or Project:
Volta Electric Vehicle Charging Stations

Project Location (describe, and attach a location map):
Jefferson Valley Mall, 650 Lee Blvd., Yorktown, New York

Brief Description of Proposed Action:
Volta is proposing to install four (4) EV Level 2 charging stations with display screens on existing landscaped islands in the Jefferson Valley Mall property.The EV stations are accessory to the existing commercial use and solely for the benefit of customers visiting the store.

Name of Applicant or Sponsor:	Telephone: 914-761-1300
Kristen Motel, Esq - Attorney for the Applicant (Volta Charging, LLC)	E-Mail: kmotel@cuddyfeder.com

Address:
445 Hamilton Avenue, 14th Floor

City/PO:	State:	Zip Code:
White Plains	New York	10601

	NO	YES
1. Does the proposed action only involve the legislative adoption of a plan, local law, ordinance, administrative rule, or regulation? If Yes, attach a narrative description of the intent of the proposed action and the environmental resources that may be affected in the municipality and proceed to Part 2. If no, continue to question 2.	☑	☐
2. Does the proposed action require a permit, approval or funding from any other government Agency? If Yes, list agency(s) name and permit or approval:	☑	☐

3. a. Total acreage of the site of the proposed action? 38.76 acres
   b. Total acreage to be physically disturbed? <200 s.f./ 0 acres
   c. Total acreage (project site and any contiguous properties) owned or controlled by the applicant or project sponsor? 38.76 acres

4. Check all land uses that occur on, are adjoining or near the proposed action:

5. ☐ Urban ☐ Rural (non-agriculture) ☐ Industrial ☑ Commercial ☐ Residential (suburban)
   ☐ Forest ☐ Agriculture ☐ Aquatic ☐ Other(Specify):
   ☐ Parkland

	NO	YES	N/A
5. Is the proposed action,			
a. A permitted use under the zoning regulations?	☐	✓	☐
b. Consistent with the adopted comprehensive plan?	☐	✓	☐

	NO	YES
6. Is the proposed action consistent with the predominant character of the existing built or natural landscape?	☐	✓
7. Is the site of the proposed action located in, or does it adjoin, a state listed Critical Environmental Area? If Yes, identify: _____	✓	☐
8. a. Will the proposed action result in a substantial increase in traffic above present levels?	✓	☐
b. Are public transportation services available at or near the site of the proposed action?	☐	✓
c. Are any pedestrian accommodations or bicycle routes available on or near the site of the proposed action?	☐	✓
9. Does the proposed action meet or exceed the state energy code requirements? If the proposed action will exceed requirements, describe design features and technologies: _____ _____	☐	✓
10. Will the proposed action connect to an existing public/private water supply? If No, describe method for providing potable water: _____ _____	✓	☐
11. Will the proposed action connect to existing wastewater utilities? If No, describe method for providing wastewater treatment: _____ _____	✓	☐
12. a. Does the project site contain, or is it substantially contiguous to, a building, archaeological site, or district which is listed on the National or State Register of Historic Places, or that has been determined by the Commissioner of the NYS Office of Parks, Recreation and Historic Preservation to be eligible for listing on the State Register of Historic Places?	✓	☐
b. Is the project site, or any portion of it, located in or adjacent to an area designated as sensitive for archaeological sites on the NY State Historic Preservation Office (SHPO) archaeological site inventory?	✓	☐
13. a. Does any portion of the site of the proposed action, or lands adjoining the proposed action, contain wetlands or other waterbodies regulated by a federal, state or local agency?	☐	✓
b. Would the proposed action physically alter, or encroach into, any existing wetland or waterbody?	✓	☐
If Yes, identify the wetland or waterbody and extent of alterations in square feet or acres: _____ _____ _____		

14. Identify the typical habitat types that occur on, or are likely to be found on the project site. Check all that apply:

☐ Shoreline ☐ Forest ☐ Agricultural/grasslands ☐ Early mid-successional

☐ Wetland ☐ Urban ☑ Suburban

	NO	YES
15. Does the site of the proposed action contain any species of animal, or associated habitats, listed by the State or Federal government as threatened or endangered?	☑	☐
16. Is the project site located in the 100-year flood plan?	☐	☑
17. Will the proposed action create storm water discharge, either from point or non-point sources?	☑	☐
If Yes,		
a. Will storm water discharges flow to adjacent properties?	☐	☐
b. Will storm water discharges be directed to established conveyance systems (runoff and storm drains)?	☐	☐
If Yes, briefly describe: _____		
18. Does the proposed action include construction or other activities that would result in the impoundment of water or other liquids (e.g., retention pond, waste lagoon, dam)? If Yes, explain the purpose and size of the impoundment: _____	☑	☐
19. Has the site of the proposed action or an adjoining property been the location of an active or closed solid waste management facility? If Yes, describe: _____	☑	☐
20. Has the site of the proposed action or an adjoining property been the subject of remediation (ongoing or completed) for hazardous waste? If Yes, describe: _____	☑	☐

I CERTIFY THAT THE INFORMATION PROVIDED ABOVE IS TRUE AND ACCURATE TO THE BEST OF MY KNOWLEDGE

Applicant/sponsor/name: Kristen Motel, Esq. Date: 8/25/22

Signature: _____ Title: Attorney for Applicant

PRINT FORM

EAF Mapper Summary Report

Wednesday, August 10, 2022 5:21 PM

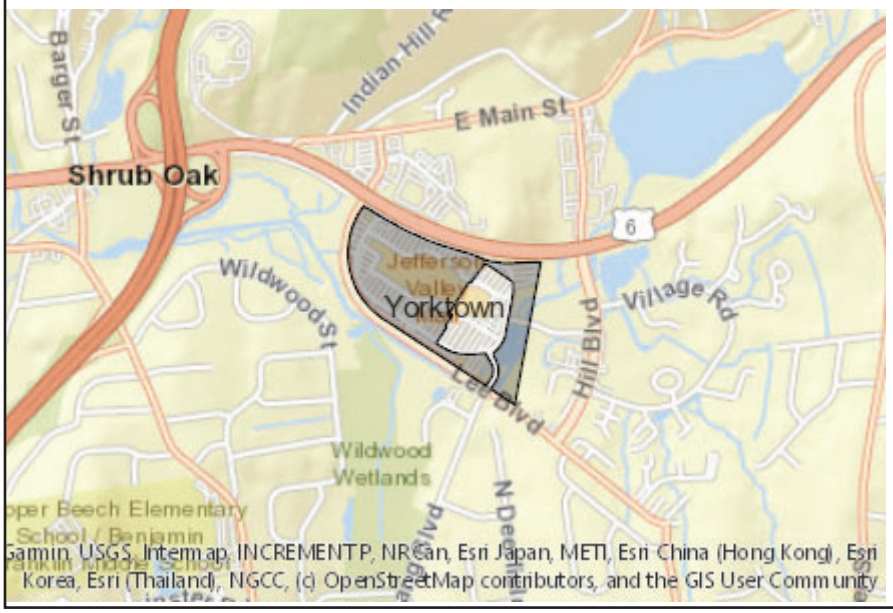

Disclaimer: The EAF Mapper is a screening tool intended to assist project sponsors and reviewing agencies in preparing an environmental assessment form (EAF). Not all questions asked in the EAF are answered by the EAF Mapper. Additional information on any EAF question can be obtained by consulting the EAF Workbooks. Although the EAF Mapper provides the most up-to-date digital data available to DEC, you may also need to contact local or other data sources in order to obtain data not provided by the Mapper. Digital data is not a substitute for agency determinations.

Part 1 / Question 7 [Critical Environmental Area]	No
Part 1 / Question 12a [National or State Register of Historic Places or State Eligible Sites]	No
Part 1 / Question 12b [Archeological Sites]	No
Part 1 / Question 13a [Wetlands or Other Regulated Waterbodies]	Yes - Digital mapping information on local and federal wetlands and waterbodies is known to be incomplete. Refer to EAF Workbook.
Part 1 / Question 15 [Threatened or Endangered Animal]	No
Part 1 / Question 16 [100 Year Flood Plain]	Yes
Part 1 / Question 20 [Remediation Site]	No

EXHIBIT C

Local Law Filing

(Use this form to file a local law with the Secretary of State.)

Text of law should be given as amended. Do not include matter being eliminated and do not use italics or underlining to indicate new matter.

FILED
STATE RECORDS
APR 22 2022
DEPARTMENT OF STATE

☐ **County** ☐ **City** ☒ **Town** ☐ **Village**
(Select one:)

of Yorktown

Local Law No. 4 **of the year 20**22

A local law to amend Chapter 300 of the Code of the Town of Yorktown entitled "ZONING"
(Insert Title)

Be it enacted by the Town Board **of the**
(Name of Legislative Body)

☐ **County** ☐ **City** ☒ **Town** ☐ **Village**
(Select one:)

of Yorktown **as follows:**

Section I. Statement of Authority.
This local law is authorized by the New York State Constitution, the provisions of the New York Municipal Home Rule Law, the relevant provisions of the Town Law of the State of New York, the laws of the Town of Yorktown and the general police power vested with the Town of Yorktown to promote the health, safety and welfare of all residents and property owners in the Town.

Section II.
Section 300-3(B) of the Code of the Town of Yorktown is hereby amended by adding the following definitions:

Electric Vehicle ("EV") Charging Station
An apparatus designed to provide electric battery charging for electric powered vehicles and installed in publicly accessed parking areas and lots.

Electronic visual output device
An electronic illuminated screen similar to a computer or television monitor or display, whether monochrome or colored, and of common types such as cathode ray tube (CRT), thin film transistor (TFT), liquid crystal display (LCD), light-emitting diode (LED) or organic light-emitting diode (ODED).

continued on Page 2A

(If additional space is needed, attach pages the same size as this sheet, and number each.)

Section 300-21(C) of the Code of the Town of Yorktown is hereby amended by adding the following 300-21(C)(7)(b)[4]:

Electric Vehicle Charging Stations

Section 300-21(C) of the Code of the Town of Yorktown is hereby amended by adding the following 300-21(C)(8)(c)[6]:

Electric Vehicle Charging Stations

Section 300-46(N)(5) of the Code of the Town of Yorktown is hereby amended by adding a new section 300-46(N)(5)(a) as follows:

Illuminated signs comprised of an electronic visual output device such as a monitor or visual display which is incorporated into a fuel pump for the purpose of delivering commercial advertising, news, or general information are permitted as provided in Article XX Signs.

Section 300-193.1 of the Code of the Town of Yorktown is hereby amended by adding the following new section 300-193.1(Q):

Illuminated signs comprised of an electronic visual output device such as a monitor or visual display which is incorporated into an electric vehicle charging station or fuel pump for the purpose of delivering commercial advertising, news, or general information as defined in this chapter and as provided in 300-193.10.2.

Section 300-193 of the Code of the Town of Yorktown is hereby amended by replacing 300-193.10 with the flowing language:

Illuminated alternating image or video-based message signs.

Section 300-193 of the Code of the Town of Yorktown is hereby amended by adding the following new section 300-193.10.1:

Time-temperature-date signs. Time-temperature-date signs are permitted as permanent accessory signs on commercially developed parcels notwithstanding the general prohibition on changing signs. These signs may only display numerical information in an easily comprehensible way. They may be freestanding or building signs and are subject to the regulations applicable to such signs. They shall be counted as part of an occupancy's allowable sign area.

Section 300-193 of the Code of the Town of Yorktown is hereby amended by adding the following new section 300-193.10.2:

Illuminated signs on EV charging stations or fuel pumps are permitted and are exempt from the requirements of this section provided they comply with the following standards:

a) The sign may not be incorporated into equipment that exceeds 7.5 feet in height or three feet in width.
b) The electronic visual output device shall not exceed 9 square feet per screen.
c) No more than one screen shall be permitted on each side of a charging station or fuel pump and no more than two screens shall be permitted per station or fuel pump.
d) Non-video, static image advertising or messaging systems shall be equipped with an auto-dimming feature.
e) Non-video, static image advertising or messaging systems shall limit content refresh rates to no less than every eight (8) seconds.
f) Video or sound is prohibited unless permitted by the authorized board under site plan or special permit approval.

Compliance with these standards shall be regulated and maintained through site plan or special permit approval or amendment thereto in accordance with this Chapter 300.

Severability.

If any clause, sentence, phrase, paragraph or any part of this local law shall for any reason be adjudicated finally by a court of competent jurisdiction to be invalid, such judgment shall not affect, impair or invalidate the remainder of this local law, but shall be confined in its operation and effect to the clause, sentence, phrase, paragraph or part thereof, directly involved in the controversy or action in which such judgment shall have been rendered. It is hereby declared to be the legislative intent that the remainder of this local law would have been adopted had any such provisions been excluded.

Section I. Repeal

All ordinances, local laws and parts thereof inconsistent with this Local Law are hereby repealed to the extent of such inconsistency.

Section II. Effective Date.

This local law shall become effective upon filing in the office of the Secretary of State in accordance with the provisions of the Municipal Home Rule Law.

(Complete the certification in the paragraph that applies to the filing of this local law and strike out that which is not applicable.)

1. **(Final adoption by local legislative body only.)**
I hereby certify that the local law annexed hereto, designated as local law No. 4 of 2022 of the ~~(County)(City)~~(Town)~~(Village)~~ of Yorktown was duly passed by the Town Board on April 19, 2022, in accordance with the applicable
(Name of Legislative Body)
provisions of law.

2. **(Passage by local legislative body with approval, no disapproval or repassage after disapproval by the Elective Chief Executive Officer*.)**
I hereby certify that the local law annexed hereto, designated as local law No. of 20____ of the (County)(City)(Town)(Village) of _____ was duly passed by the _____ on _____ 20____, and was (approved)(not approved)
(Name of Legislative Body)
(repassed after disapproval) by the _____ and was deemed duly adopted
(Elective Chief Executive Officer)*
on _____ 20[ ][ ], in accordance w ith the applicable provisions of law.

3. **(Final adoption by referendum.)**
I hereby certify that the local law annexed hereto, designated as local law No. _____ of 20____ of the (County)(City)(Town)(Village) of _____ was duly passed by the _____ on _____ 20____, and was (approved)(not approved)
(Name of Legislative Body)
(repassed after disapproval) by the _____ on _____ 20____.
(Elective Chief Executive Officer)*

Such local law was submitted to the people by reason of a (mandatory)(permissive) referendum, and received the affirmative vote of a majority of the qualified electors voting thereon at the (general)(special)(annual) election held on _____ 20____, in accordance with the applicable provisions of law.

4. **(Subject to permissive referendum and final adoption because no valid petition was filed requesting referendum.)**
I hereby certify that the local law annexed hereto, designated as local law No. _____ of 20____ of the (County)(City)(Town)(Village) of _____ was duly passed by the _____ on _____ 20____, and was (approved)(not approved)
(Name of Legislative Body)
(repassed after disapproval) by the _____ on _____ 20____. Such local
(Elective Chief Executive Officer)*
law was subject to permissive referendum and no valid petition requesting such referendum was filed as of _____ 20____, in accordance with the applicable provisions of law.

* Elective Chief Executive Officer means or includes the chief executive officer of a county elected on a county-wide basis or, if there be none, the chairperson of the county legislative body, the mayor of a city or village, or the supervisor of a town where such officer is vested with the power to approve or veto local laws or ordinances.

5. (City local law concerning Charter revision proposed by petition.)
I hereby certify that the local law annexed hereto, designated as local law No._____ of 20_____ of the City of _____ having been submitted to referendum pursuant to the provisions of section (36)(37) of the Municipal Home Rule Law, and having received the affirmative vote of a majority of the qualified electors of such city voting thereon at the (special)(general) election held on _____ 20_____, became operative.

6. (County local law concerning adoption of Charter.)
I hereby certify that the local law annexed hereto, designated as local law No._____ of 20_____ of the County of _____State of New York, having been submitted to the electors at the General Election of November _____ 20_____, pursuant to subdivisions 5 and 7 of section 33 of the Municipal Home Rule Law, and having received the affirmative vote of a majority of the qualified electors of the cities of said county as a unit and a majority of the qualified electors of the towns of said county considered as a unit voting at said general election, became operative.

(If any other authorized form of final adoption has been followed, please provide an appropriate certification.)
I further certify that I have compared the preceding local law with the original on file in this office and that the same is a correct transcript therefrom and of the whole of such original local law, and was finally adopted in the manner indicated in paragraph 1 above.

Diana L. Quast
Clerk of the county legislative body, City, Town or Village Clerk or officer designated by local legislative body

(Seal)

Date: April 20, 2022

VOLTA

JEFFERSON VALLEY MALL

650 LEE BOULEVARD
YORKTOWN HEIGHTS, NY 10598
WESTCHESTER COUNTY

CONTRACTOR VERIFICATION CHECKLIST

ITEM	TASK	YES	NO	N/A
1	CONTACT 811 UTILITY PRIOR TO EXCAVATION WORK.			
2	NOTIFY VOLTA & KIMLEY-HORN OF ANY DISCREPANCIES W/ PLANS OR POTENTIAL CONFLICTS.			
3	VERIFY ALL FIELD CONDITIONS PRIOR TO START OF CONSTRUCTION IN ACCORDANCE WITH THESE PLANS.			
4	INSTALL WORK AREA PROTECTION MEASURES.			
5	FIELD LOCATE EXISTING UTILITIES AND CROSSINGS & VERIFY NO CONFLICTS W/PROPOSED INFRASTRUCTURE.			
6	FIELD VERIFY ALL STALL DIMENSIONS AND EQUIPMENT LOCATIONS.			
7	CONFIRM ALL ADA AND LOCAL REQUIREMENTS ARE MET.			
8	ESTABLISH TEMPORARY CONSTRUCTION ACCESS(ES).			
9	IMPLEMENT AND MAINTAIN EPSC CONTROL MEASURES PER LOCAL REQUIREMENTS.			
10	LOCATE VERTICAL AND HORIZONTAL UTILITIES PRIOR TO BORING.			
11	PROVIDE PROPOSED LIMITS OF ASPHALT OVERLAY SKETCH TO KIMLEY-HORN & VOLTA (IF NEEDED).			
12	SEED & STABILIZE ALL DISTURBED AREAS AFTER FINAL GRADING.			

CODE BLOCK

ALL WORK AND MATERIALS SHALL BE PERFORMED AND INSTALLED IN ACCORDANCE WITH THE CURRENT EDITIONS OF THE BUILDING/ DWELLING, STRUCTURAL, PLUMBING, MECHANICAL, ELECTRICAL, AND FIRE/LIFE SAFETY CODES AS ADOPTED BY THE LOCAL GOVERNING AUTHORITIES. NOTHING IN THESE PLANS IS TO BE CONSTRUCTED TO PERMIT WORK NOT CONFORMING TO THE LOCAL GOVERNING AUTHORITIES CODES.

PROJECT DESCRIPTION

VOLTA PROPOSES:

- APPLICATION IS MADE FOR 4 ELECTRIC VEHICLE (EV) CHARGING STATION FIXTURES TO BE LOCATED IN EXISTING CURBED/STRIPED ISLAND AREAS THAT ARE ADJACENT TO ON-SITE PARKING SPACES AND PART OF THE EXISTING JEFFERSON VALLEY MALL AT THE PROPERTY. THE EV FIXTURES ARE CUSTOMARY ACCESSORY AND INCIDENTAL TO THE EXISTING COMMERCIAL USE AND SOLELY FOR THE BENEFIT OF CUSTOMERS VISITING THE MALL. THE FIXTURES ARE LOCATED TO PROVIDE PRIORITY PARKING FOR PATRONS WITH EVs AND DISPLAY VISIBILITY ALONG THE INTERIOR CIRCULATION AISLE FOR SHOPPERS. THERE ARE NO PROPOSED CHANGES TO THE PARKING SPACES OR ANY OF THE EXISTING TRAFFIC CIRCULATION AT THE PROPERTY.

PROJECT TEAM

APPLICANT:
KIMLEY-HORN ENGINEERING AND LANDSCAPE ARCHITECTURE OF NEW YORK, P.C.
1 N LEXINGTON AVE. SUITE 505
WHITE PLAINS, NY 10601
CONTACT: DEAN APOSTOLERIS
PHONE: (914) 368-9199
EMAIL: DEAN.APOSTOLERIS@KIMLEY-HORN.COM

VOLTA REPRESENTATIVE:
VOLTA
155 DE HARO STREET
SAN FRANCISCO, CA 94103
CONTACT: EVA ABENIACAR
PHONE: (610) 570-9756
EMAIL: EVA.ABENIACAR@VOLTACHARGING.COM

SITE PARTNER:
STOP & SHOP
1385 HANCOCK ST
QUINCY, MA 02169
CONTACT: LINDA CAMARA
PHONE: (508) 654-6851
EMAIL: LCAMARA@STOPANDSHOP.COM

PROGRAM MANAGER:
KIMLEY-HORN ENGINEERING AND LANDSCAPE ARCHITECTURE OF NEW YORK, P.C.
CONTACT: RYAN GRAM
PHONE: (615)-564-2865
EMAIL: RYAN.GRAM@KIMLEY-HORN.COM

CIVIL ENGINEER:
KIMLEY-HORN ENGINEERING AND LANDSCAPE ARCHITECTURE OF NEW YORK, P.C.
CONTACT: RYAN GRAM
PHONE: (615) 564-2865
EMAIL: RYAN.GRAM@KIMLEY-HORN.COM

ELECTRICAL ENGINEER:
KIMLEY-HORN ENGINEERING AND LANDSCAPE ARCHITECTURE OF NEW YORK, P.C.
CONTACT: JEFFREY SALLEE
PHONE: (757) 213-8635
EMAIL: JEFFREY.SALLEE@KIMLEY-HORN.COM

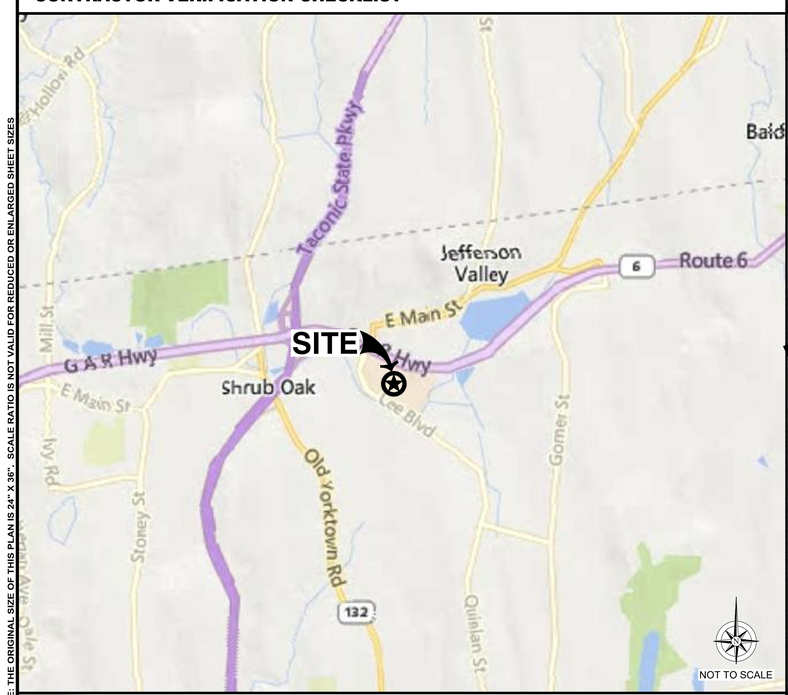

VICINITY MAP

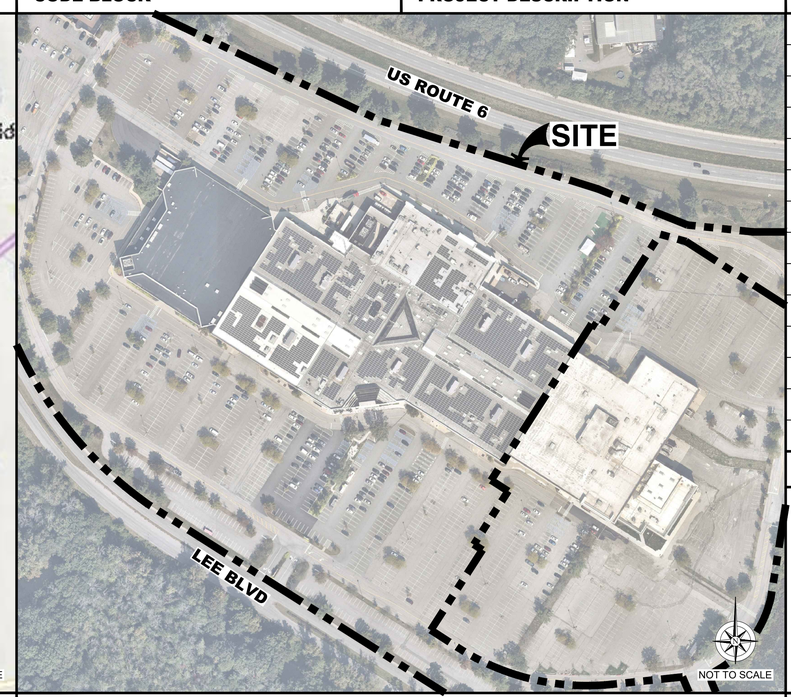

LOCAL MAP

SHEET NUMBER	SHEET TITLE
C0-00	COVER SHEET
C0-01	GENERAL NOTES
C0-02	VOLTA STATION OVERVIEW
C1-00	OVERALL SITE PLAN
C2-00	ENLARGED SITE PLAN
C2-01	ENLARGED SITE PLAN
C3-00	SITE DETAILS
C3-01	SITE DETAILS
C3-02	SITE DETAILS
C3-03	SITE DETAILS
E1-00	ELECTRICAL ONE LINE DIAGRAM & PANEL SCHEDULE
E1-01	ELECTRICAL ONE LINE DIAGRAM & PANEL SCHEDULE
E2-00	ELECTRICAL NOTES & DETAILS

811
Know what's BELOW.
CALL before you dig.

CALL AT LEAST TWO WORKING DAYS BEFORE YOU DIG

DIG ALERT

CONTRACTOR SHALL VERIFY ALL PLANS & EXISTING LOCATIONS, CONDITIONS ON THE JOB SITE & SHALL IMMEDIATELY NOTIFY THE ENGINEER IN WRITING OF ANY DISCREPANCIES BEFORE PROCEEDING WITH THE WORK OR BE RESPONSIBLE FOR SAME.

CALL BEFORE YOU DIG

NOTE: THE ORIGINAL SIZE OF THIS PLAN IS 24" X 36". SCALE RATIO IS NOT VALID FOR REDUCED OR ENLARGED SHEET SIZES

VOLTA
155 DE HARO STREET
SAN FRANCISCO, CA 94103

Kimley»Horn
1 N LEXINGTON AVE, SUITE 505
WHITE PLAINS, NY 10601
Main: (914) 368-9200 | www.kimley-horn.com
© 2021 Kimley-Horn Engineering and Landscape Architecture of New York, P.C

REV	DATE	DESCRIPTION	BY
1	04/01/2021	CD90s	JC
2	05/12/2021	COMMENTS PER VOLTA	JC
3	06/08/2021	COMMENTS PER VOLTA	LT

ISSUE DATE
06/08/2021

ISSUED FOR
REVIEW

IT IS A VIOLATION OF LAW FOR ANY PERSON, UNLESS THEY ARE ACTING UNDER THE DIRECTION OF A LICENSED PROFESSIONAL ENGINEER, TO ALTER THIS DOCUMENT.

JEFFERSON VALLEY MALL
650 LEE BOULEVARD
YORKTOWN HEIGHTS, NY 10598

SHEET TITLE
COVER SHEET

SHEET NUMBER
C0-00

GENERAL NOTES:

1. VOLTA WILL PROVIDE AN INSTALLATION GUIDE AND OTHER SUPPORTING DOCUMENTS AT TIME OF CONSTRUCTION.
2. ALL EXISTING CONDITIONS SHOWN ARE APPROXIMATE. EXISTING UTILITY LOCATIONS AND CROSSINGS ARE TO BE LOCATED IN THE FIELD. CONTRACTOR IS TO CONTACT 811 UTILITY PRIOR TO BEGINNING ANY EXCAVATION WORK.
3. ALL PAVEMENT, LANDSCAPING, UTILITIES, AND OWNER PROPERTY THAT IS DAMAGED OR AFFECTED BY CONSTRUCTION SHALL BE RETURNED TO EXISTING CONDITIONS OR BETTER AT THE CONTRACTOR'S EXPENSE.
4. PROPOSED PAVEMENT STRIPING SHALL LINE UP WITH EXISTING STRIPING WHEREVER POSSIBLE, ADDITIONAL PAVEMENT STRIPE IS NOT NECESSARILY PARALLEL TO THE CONSTRUCTED CHARGING ISLAND.
5. THIS ACCESSIBILITY REVIEW WAS UNDERTAKEN TO IDENTIFY DESIGN FEATURES OF THE PROJECT THAT MAY BE CONSIDERED BY GOVERNMENTAL AGENCIES OR DEPARTMENTS, OR NON-GOVERNMENTAL GROUPS TO BE NON-COMPLIANT WITH THE AMERICANS WITH DISABILITIES ACT OF 1990, REVISED 2010 ADA REGULATIONS AND STANDARDS. THE AMERICANS WITH DISABILITIES ACT OF 1990 IS A FEDERAL CIVIL RIGHTS LAW, THERE IS NO FEDERAL REVIEW PROCESS TO ENSURE FULL COMPLIANCE WITH THE GUIDELINES, EXCEPT THROUGH THE FEDERAL COURT SYSTEM. THE DEPICTIONS, NOTES, AND RECOMMENDATIONS, EXPRESSED ON THIS PLAN ARE BASED ON PROFESSIONAL JUDGEMENT GAINED FROM PAST EXPERIENCE WITH ACCESSIBILITY LAWS, CODES, AND STANDARDS AND THE WORKING INVOLVEMENT TO DEVELOP ACCESSIBILITY STANDARDS THAT WILL MEET OR EXCEED THE APPLICABLE FEDERAL GUIDELINES. ACCORDINGLY, NO CLAIMS OR WARRANTIES, EXPRESSED OR IMPLIED, ARE MADE THAT IN PREPARING THIS PLAN AND PROPOSING RECOMMENDATIONS, THAT ALL POSSIBLE BARRIERS TO ALL PEOPLE HAVE BEEN IDENTIFIED.
6. CONTRACTOR SHALL ACHIEVE A MINIMUM OF 1% BUT NO MORE THAN A 2% SLOPE IN ANY DIRECTION WITHIN ADJACENT ACCESSIBLE SPACE AND BLEND ASPHALT OVERLAY TO EXISTING GRADES AS REQUIRED. CONTRACTOR SHALL PROVIDE A SKETCH TO VOLTA OF PROPOSED LIMITS OF ASPHALT OVERLAY TO ACHIEVE THIS REQUIREMENT PRIOR TO BEGINNING PAVEMENT WORK.
7. ACCESSIBLE EV STALLS WERE DESIGNED BASED ON EXISTING CONDITIONS AND WITHOUT THE BENEFIT OF SURVEY DATA. ALL ADA AND LOCAL REQUIREMENTS INCLUDING BUT NOT LIMITED TO SLOPE AND SPACING SHALL BE CONFIRMED BY THE CONTRACTOR AND MET AT THE TIME OF CONSTRUCTION.
8. CONTRACTOR TO NOTIFY THE ENGINEER OF ANY DISCREPANCIES IN ACCESSIBILITY PRIOR TO CONSTRUCTION.
9. UNDER NO CIRCUMSTANCE IS THE CONTRACTOR TO DISRUPT ANY OPERATIONS AT THE SITE HOST LOCATION, INCLUDING BUT NOT LIMITED TO CUSTOMER DISRUPTION, UTILITIES, AND INFRASTRUCTURE.
10. CONTRACTOR SHALL BE RESPONSIBLE TO PROTECT WORK AREAS WITH CONES AND/OR BARRICADES AT ALL TIMES.

EROSION CONTROL & GRADING NOTES:

1. ADDITIONAL EROSION CONTROL DEVICES TO BE USED AS REQUIRED BY LOCAL INSPECTOR.
2. DISTURBED AREAS LEFT IDLE FOR FIVE DAYS, AND NOT TO FINAL GRADE, WILL BE ESTABLISHED TO TEMPORARY VEGETATION. MULCH, TEMPORARY VEGETATION OR PERMANENT VEGETATION SHALL BE COMPLETED ON ALL EXPOSED AREAS WITHIN 14 DAYS AFTER DISTURBANCE. ALL AREAS TO FINAL GRADE WILL BE ESTABLISHED TO PERMANENT VEGETATION UPON COMPLETION.
3. WHEN HAND PLANTING, MULCH (HAY OR STRAW) SHOULD BE UNIFORMLY SPREAD OVER SEEDED AREA WITHIN 24 HOURS OF SEEDING. IF UNABLE TO ACCOMPLISH, MULCH SHALL BE USED AS A TEMPORARY COVER. CONCENTRATED FLOW AREAS AND ALL SLOPES STEEPER THAN 2.5:1 AND WITH A HEIGHT OF TEN FEET OR GREATER (DOES NOT APPLY TO RETAINING WALLS), AND CUTS AND FILLS WITHIN BUFFERS, SHALL BE STABILIZED WITH THE APPROPRIATE EROSION CONTROL MATTING OR BLANKETS.
4. THE ESCAPE OF SEDIMENT FROM THE SITE SHALL BE PREVENTED BY THE INSTALLATION OF EROSION AND SEDIMENT CONTROL MEASURES AND PRACTICES PRIOR TO, OR CONCURRENT WITH, LAND-DISTURBING ACTIVITIES.
5. EROSION CONTROL MEASURES WILL BE MAINTAINED AT ALL TIMES. IF FULL IMPLEMENTATION OF THE PLAN DOES NOT PROVIDE FOR EFFECTIVE EROSION CONTROL, ADDITIONAL EROSION CONTROL AND SEDIMENT CONTROL MEASURES SHALL BE IMPLEMENTED TO CONTROL OR TREAT THE SEDIMENT SOURCE.
6. SEED ALL DISTURBED AREAS UNLESS OTHERWISE NOTED AS PART OF THIS CONTRACT.
7. THE CONTRACTOR SHALL DETERMINE THE EXACT LOCATION OF ALL EXISTING UTILITIES BEFORE COMMENCING WORK AND AGREES TO BE RESPONSIBLE FOR ANY AND ALL DAMAGES WHICH MIGHT RESULT FROM THE CONTRACTOR'S FAILURE TO EXACTLY LOCATE AND PRESERVE ANY UNDERGROUND UTILITIES TO REMAIN. THE CONTRACTOR IS TO NOTIFY ENGINEER IMMEDIATELY OF ANY DISCREPANCIES AND/OR CONFLICTS WITH EXISTING OR PROPOSED UTILITIES PRIOR TO PROCEEDING.
8. STOCKPILED TOPSOIL OR FILL MATERIAL IS TO BE TREATED SO THE SEDIMENT RUN-OFF WILL NOT CONTAMINATE SURROUNDING AREAS OR ENTER NEARBY STREAMS. STOCK PILE LOCATIONS SHALL BE COORDINATED WITH THE ENGINEER PRIOR TO GRADING ACTIVITIES. EROSION & SEDIMENT CONTROL PRACTICE SHALL BE INSTALLED PRIOR TO STOCKPILE OPERATIONS.
9. CONSTRUCT SILT BARRIERS BEFORE BEGINNING GRADING OPERATIONS.
10. MULCH AND SEED ALL DISTURBED AREAS AS SOON AS POSSIBLE AFTER FINAL GRADING IS COMPLETED (WITHIN 15 DAYS OF ACHIEVED FINAL GRADES) UNLESS OTHERWISE INDICATED. CONTRACTOR SHALL TAKE WHATEVER MEANS NECESSARY TO ESTABLISH PERMANENT SOIL STABILIZATION. STEEP SLOPES (GREATER THAN 3:1) SHALL BE STABILIZED WITHIN 7 DAYS OF FINAL GRADING.
11. PROVIDE TEMPORARY CONSTRUCTION ACCESS(ES) AT THE POINT(S) WHERE CONSTRUCTION VEHICLES EXIT THE CONSTRUCTION AREA. MAINTAIN PUBLIC ROADWAYS FREE OF TRACKED MUD AND DIRT.
12. DO NOT DISTURB VEGETATION OR REMOVE TREES EXCEPT WHEN NECESSARY FOR GRADING PURPOSES.

ADA COMPLIANCE:

1. CURB RAMPS ALONG PUBLIC STREETS AND IN THE PUBLIC RIGHT-OF-WAY SHALL BE CONSTRUCTED BASED ON THE CITY STANDARD CONSTRUCTION DETAILS AND SPECIFICATIONS.
2. PRIVATE CURB RAMPS ON THE SITE (I.E. OUTSIDE PUBLIC STREET RIGHT-OF-WAY) SHALL CONFORM TO ADA STANDARDS AND SHALL HAVE A DETECTABLE WARNING SURFACE THAT IS FULL WIDTH AND FULL DEPTH OF THE CURB RAMP, NOT INCLUDING FLARES.
3. ALL ACCESSIBLE ROUTES, GENERAL SITE AND BUILDING ELEMENTS, RAMPS, CURB RAMPS, STRIPING, AND PAVEMENT MARKINGS SHALL CONFORM TO ADA STANDARDS FOR ACCESSIBLE DESIGN, LATEST EDITION.
4. BEFORE PLACING PAVEMENT, CONTRACTOR SHALL VERIFY THAT SUITABLE ACCESSIBLE PEDESTRIAN ROUTES (PER ADA AND FHA) EXIST TO AND FROM EVERY DOOR AND ALONG SIDEWALKS, ACCESSIBLE PARKING SPACES, ACCESS AISLES, AND ACCESSIBLE ROUTES. IN NO CASE SHALL AN ACCESSIBLE RAMP SLOPE EXCEED 1 VERTICAL TO 12 HORIZONTAL. IN NO CASE SHALL SIDEWALK CROSS SLOPE EXCEED 2.0 PERCENT. IN NO CASE SHALL LONGITUDINAL SIDEWALK SLOPE EXCEED 5.0 PERCENT. ACCESSIBLE PARKING SPACES AND ACCESS AISLES SHALL NOT EXCEED 2.0 PERCENT SLOPE IN ANY DIRECTION.
5. CONTRACTOR SHALL TAKE FIELD SLOPE MEASUREMENTS ON FINISHED SUBGRADE AND FORM BOARDS PRIOR TO PLACING PAVEMENT TO VERIFY THAT ADA SLOPE REQUIREMENTS ARE PROVIDED. CONTRACTOR SHALL CONTACT ENGINEER PRIOR TO PAVING IF ANY EXCESSIVE SLOPES ARE ENCOUNTERED. NO CONTRACTOR CHANGE ORDERS WILL BE ACCEPTED FOR ADA SLOPE COMPLIANCE ISSUES.

SITE NOTES:

1. HORIZONTAL DIRECTIONAL DRILLING (HDD) OR OTHER TRENCHLESS METHODS AS APPROVED BY SITE HOST ARE THE PREFERRED METHOD TO INSTALL CONDUIT BENEATH EXISTING PARKING LOTS AND PAVED AREAS.
   - 1.1. CONDUIT SHALL BE INSTALLED AT A MINIMUM DEPTH OF TWO AND ONE-HALF FEET (2.5') OR BELOW THE FREEZE LINE, WHICHEVER IS DEEPER. CONDUIT TYPE AND DESIGN TO BE SPECIFIED BY EV CHARGING STATION VENDOR AND MEET ALL LOCAL REQUIREMENTS. CONDUIT DIAMETER SHALL BE NO LARGER THAN TWO (2) INCHES.
   - 1.2. THE RECEIVING PIT SHALL BE LOCATED AS CLOSE AS REASONABLY POSSIBLE TO THE PROPOSED WALL PENETRATION TO LIMIT THE LENGTH OF BUILDING-MOUNTED CONDUIT. LOCATE RECEIVING PIT WITHIN ASPHALT PAVED AREA OR CONCRETE SIDEWALK AREA; RECEIVING PIT SHALL NOT BE LOCATED WITHIN THE UNLOADING PAD [SIX TO TEN INCH (6-10") REINFORCED CONCRETE SLAB AT THE REAR OF THE STORE]. RECEIVING PIT LOCATION AND WORK AREA SHALL NOT AFFECT SITE HOST CUSTOMER OR DELIVERY TRAFFIC. SEE SUPPLEMENTAL DOCUMENTS, RECEIVING AREA DIAGRAM.
   - 1.3. THE RECEIVING PIT SIZE SHALL BE LIMITED TO THREE FEET (3') BY THREE FEET (3') AND SHALL NOT UNDERMINE THE BUILDING FOUNDATION, ENCLOSURES OR CONCRETE UNLOADING PAD.
   - 1.4. BACKFILL EXCAVATIONS AND REPAIR PAVEMENT PER SPECIFICATIONS BELOW.
   - 1.5. WHERE CONCRETE PAVEMENT, SIDEWALK, ASPHALT PAVEMENT, CURBING, OR CURBING GUTTER IS REMOVED, THE WIDTH OF THE REMOVAL SHALL EXCEED THE ACTUAL WIDTH AT THE TOP OF THE TRENCH BY TWELVE INCHES (12") ON EACH SIDE OF THE TRENCH, OR A TOTAL OF TWO FEET (2') WIDER THAN THE TRENCH.
   - 1.6. TRENCHING THROUGH THE CONCRETE RECEIVING PAD AT THE REAR OF THE STORE OR THE DRIVE-THRU SLAB IS NOT ALLOWED. ONLY TRENCHING THROUGH MINOR CONCRETE INSTALLATIONS SUCH AS SIDEWALKS WILL BE PERMITTED.
   - 1.7. EXCAVATE TRENCHES TO A DEPTH FOUR INCHES (4") DEEPER THAN BOTTOM OF FINISHED PIPE ELEVATION.
   - 1.8. THE BOTTOM WIDTH OF THE TRENCH SHALL BE AS REQUIRED TO PERMIT CONDUIT TO BE PROPERLY LAIN AND BACKFILL TO BE PLACED AND PROPERLY COMPACTED.
   - 1.9. REMOVED PAVEMENT, CONCRETE AND EXCAVATED MATERIALS UNSUITABLE FOR USE AS BACKFILL SHALL BE DISPOSED OFFSITE.
   - 1.10. BEDDING AND BACKFILL MAY BE MATERIAL EXCAVATED FROM THE TRENCH PROVIDED THAT IT IS FREE FROM DEBRIS AND ROCKS LARGER THAN ONE AND ONE-HALF INCHES (1-1/2").
   - 1.11. OVER THE PIPE, IN LAYERS NOT EXCEEDING FOUR INCHES (4"), PLACE AND COMPACT SUITABLE FILL MATERIAL TO NINETY-FIVE PERCENT (95%) DRY DENSITY AS DETERMINED BY ASTM D698.
   - 1.12. COMPACTING EQUIPMENT SHALL BE OF SUCH DESIGN, WEIGHT, AND QUALITY AS IS REQUIRED TO OBTAIN THE DENSITIES SPECIFIED HEREIN OR INDICATED ON THE DESIGN DRAWINGS. AREAS INACCESSIBLE TO SELF-PROPELLED COMPACTING EQUIPMENT SHALL BE COMPACTED OR CONSOLIDATED BY HAND-OPERATED MECHANICAL TAMPERS OR VIBRATORS.
   - 1.13. RESTORE GRASS, LANDSCAPING, IRRIGATION AND ALL FEATURES TO THEIR PRECONSTRUCTION CONDITION.
2. ANY UTILITIES, PAVEMENT, IRRIGATION, LANDSCAPING OR OTHER SITE FEATURES DAMAGED DURING CONSTRUCTION SHALL BE REPAIRED BY EV CHARGING STATION VENDOR TO SITE HOST SPECIFICATION.
   - 2.1. WHERE LANDSCAPING IS IMPACTED, IT IS THE RESPONSIBILITY OF EV CHARGING STATION VENDOR TO REPOSITION OR PROVIDE NEW LANDSCAPING WITHIN THE SITE HOST PROPERTY TO ENSURE COMPLIANCE WITH ANY CODE REQUIREMENTS.
   - 2.2. WHERE PARKING LOT, SIDEWALK OR OTHER PAVED AREAS ARE IMPACTED OR DAMAGED, IT IS THE RESPONSIBILITY OF THE EV CHARGING STATION VENDOR TO REPAIR THE AREA TO LIKE NEW CONDITION, REPAIR SHOULD EXTEND BEYOND DAMAGED AREA TO NEAREST CLEAN BREAK THAT ALIGNS WITH ARCHITECTURAL BREAKS, MATERIAL JOINTS, PAVEMENT MARKINGS, ETC.
3. WHERE APPLICABLE, UTILITY SERVICE PROVIDER TO USE SITE HOST APPROVED ROE (RIGHT OF ENTRY) AGREEMENT. SITE HOST PROGRAM MANAGER WILL PROVIDE TEMPLATE WHEN NECESSARY.
4. ASPHALT PAVEMENT REMOVAL AND REPLACEMENT
   - 4.1. SAW CUT THE PAVEMENT TO NEAT, STRAIGHT LINES TO THE FULL DEPTH OF THE PAVEMENT. PAVEMENT REMOVAL SHALL EXTEND A MINIMUM OF TWELVE INCHES (12") BEYOND THE EDGES OF THE REMOVAL AREA. ANY OTHER PAVEMENT AREAS DAMAGED DURING REMOVAL SHALL ALSO BE REPAIRED OR REPLACED AS NECESSARY
   - 4.2. REMOVE THE PAVEMENT WITHOUT DAMAGING THE PAVEMENT THAT IS TO REMAIN IN-PLACE.
   - 4.3. IF BASE REPLACEMENT IS REQUIRED, COMPACT THE IN-SITU SOILS TO NINETY-FIVE PERCENT (95%) ASTM D698 AND PLUS OR MINUS TWO PERCENT (2%) OF OPTIMUM MOISTURE CONTENT. REMOVE AND REPLACE ANY UNSUITABLE IN-SITU SOILS.
   - 4.4. PLACE AND COMPACT BASE MATERIAL TO NINETY-FIVE PERCENT (95%) OF ASTM D698.
   - 4.5. APPLY PRIME COAT TO AGGREGATE BASE IN COMPLIANCE WITH THE DOT SPECS. PRIME COAT SHALL NOT BE APPLIED MORE THAN TWENTY-FOUR (24) HOURS BEFORE ASPHALT PAVEMENT IS PLACED. APPLICATION RATE TO BE PER THE DOT SPEC.
   - 4.6. CLEAN AND APPLY TACK COAT TO THE ENDS OF CURBS, EDGES OF CONCRETE SURFACES, EDGES OF MANHOLES AND INLETS AND EDGES OF SAW CUT PAVEMENT THAT WILL REMAIN IN-PLACE.
   - 4.7. PLACE AND COMPACT HOT-MIX ASPHALT. HOT-MIX ASPHALT THICKNESS SHALL BE THE GREATER OF THE IN-PLACE ASPHALT OR THREE AND ONE-HALF INCHES (3.5"). ASPHALT MIX DESIGN SHALL BE BY THE CONTRACTOR.
   - 4.8. PLANT MIXED ASPHALT BASE/BINDER COURSE: PROVIDE ONE COURSE LAID TO A MINIMUM COMPACTED THICKNESS OF TWO INCHES (2").
   - 4.9. PLANT MIXED ASPHALT SURFACE COURSE: PROVIDE ONE COURSE LAID TO A MINIMUM COMPACTED THICKNESS OF ONE AND ONE-HALF INCHES (1-1/2").
   - 4.10. FOR SMALLER JOBS, IT MAY NOT BE FEASIBLE TO INSTALL BINDER AND SURFACE COURSES, IN WHICH CASE SURFACE COURSE, PLACED AND COMPACTED IN TWO LIFTS, WILL BE ACCEPTED.
   - 4.11. IF PLACING HOT MIX ASPHALT WITH A SHOVEL, BEGIN PLACING HMA AGAINST THE EDGES OF THE PATCH AND WORKING INWARD. HMA SHOULD NOT BE PLACED IN THE CENTER OF THE PATCH AND RAKED TOWARDS THE EDGES.
   - 4.12. THE FIRST PASS OF THE ROLLER OR COMPACTION EQUIPMENT SHOULD BE ALONG THE EDGES OF THE PATCH TO PROPERLY FORM THE JOINT. THE ROLLER WHEEL OR COMPACTION EQUIPMENT SHOULD OVERHANG THE EXISTING PAVEMENT ONTO THE PATCH BY SIX INCHES (6"). AFTER THE PERIMETER OF THE PATCH HAS BEEN COMPACTED BEGIN TO WORK TOWARDS THE CENTER OF THE PATCH WITH SUCCESSIVE PASSES OFFSET BY SIX INCHES (6").
   - 4.13. THE CONTRACTOR SHALL UTILIZE THE APPROPRIATE HEAVY COMPACTION EQUIPMENT TO ACHIEVE THE REQUIRED COMPACTION OF THE ASPHALT.
   - 4.14. SEAL THE AREA AROUND THE EDGES WITH AN ELASTOMERIC LIQUID ASPHALT SEALER TO PROTECT AGAINST WATER INFILTRATION, INCLUDING ANY INADVERTENT OVERCUTS DURING THE SAW CUTTING PROCEDURE.

PROJECT LEGEND:

(SCALE VARIES PER SHEET)

- 9 / C3-01 — DETAIL NO. / SHEET NO.
- PROPERTY LINE
- BREAK LINE
- EXISTING CURB AND GUTTER
- EXISTING CURB
- EXISTING PARKING STRIPE
- EXISTING CONCRETE PAD
- EXISTING TREE
- EXISTING SHRUB
- EXISTING FIRE HYDRANT
- EXISTING CURB INLET
- EXISTING INLET
- EXISTING CATCH BASIN
- EXISTING MANHOLE
- EXISTING POWER POLE
- EXISTING LIGHT POLE
- EXISTING SIGN
- EXISTING STRUCTURE / UTILITY
- EXISTING ELECTRICAL ROOM / PANEL
- E — PROPOSED ELECTRICAL CONDUIT
- PROPOSED ELECTRICAL JUNCTION BOX
- T — PROPOSED COMMUNICATIONS CONDUIT
- PROPOSED COMMUNICATIONS JUNCTION BOX
- PROPOSED CURB AND GUTTER
- PROPOSED CURB
- PROPOSED PARKING STRIPE
- PROPOSED CONCRETE WHEEL STOP
- PROPOSED CONCRETE PAD
- TP — TP — PROPOSED TREE PROTECTION
- PROPOSED VOLTA V4 L2 CHARGING STATION
- PROPOSED VOLTA V4 L2 POST-INSTALLED CHARGING STATION
- PROPOSED VOLTA V4 DCFC CHARGING STATION
- PROPOSED VOLTA V4 EVCS W/ 4" PIPE BOLLARDS
- PROPOSED VOLTA V3 CHARGING STATION
- PROPOSED V3 EVCS FOUNDATION W/ 4" PIPE BOLLARDS
- PROPOSED PCS FOUNDATION
- PROPOSED PCS FOUNDATION W/ 4" BOLLARDS
- PROPOSED L2 CHARGING PEDESTAL FOUNDATION
- PROPOSED REMOTE HOLSTER RAISED FOUNDATION W/ 6" CURB
- PROPOSED REMOTE HOLSTER (SQUARE/ ROUND) FLUSH FOUNDATION
- PROPOSED eBOX & eCLICK
- PROPOSED SIGN POST
- PROPOSED SIGN POST W/ BOLLARD
- PROPOSED POST INSTALLED SIGN POST
- PROPOSED POST INSTALLED SIGN POST W/ BOLLARD
- PROPOSED WALL MOUNTED SIGN
- PROPOSED 4" ISOLATED PIPE BOLLARD

VOLTA

155 DE HARO STREET
SAN FRANCISCO, CA 94103

Kimley»Horn

1 N LEXINGTON AVE, SUITE 505
WHITE PLAINS, NY 10601
Main: (914) 368-9200 | www.kimley-horn.com

© 2021 Kimley-Horn Engineering and Landscape Architecture of New York, P.C

REV	DATE	DESCRIPTION	BY
1	04/01/2021	CD90s	JC
2	05/12/2021	COMMENTS PER VOLTA	JC
3	06/08/2021	COMMENTS PER VOLTA	LT

ISSUE DATE
06/08/2021

ISSUED FOR
REVIEW

IT IS A VIOLATION OF LAW FOR ANY PERSON, UNLESS THEY ARE ACTING UNDER THE DIRECTION OF A LICENSED PROFESSIONAL ENGINEER, TO ALTER THIS DOCUMENT.

JEFFERSON VALLEY MALL

650 LEE BOULEVARD
YORKTOWN HEIGHTS, NY 10598

SHEET TITLE
GENERAL NOTES

SHEET NUMBER
C0-01

NOTE: THE ORIGINAL SIZE OF THIS PLAN IS 24" X 36". SCALE RATIO IS NOT VALID FOR REDUCED OR ENLARGED SHEET SIZES

Volta Gen4 L2 Station

Volta provides turn-key Electric Vehicle (EV) charging services for premium retail and entertainment destinations. We install and maintain the charging amenity at no cost to site partners as well as EV drivers, driving increased property value and attracting more customers who stay longer.

VOLTA STATION BENEFITS

- Installation, equipment and maintenance is paid by Volta
- Charges all electric vehicles
- Free electricity supported through third party content on displays
- Volta stations are occupied 80% of the retail day
- Volta has provided 88M free sponsored electric miles, delivered 25 gigawatt hours and eliminated over 39M pounds of CO2 emissions

CHARGING UNIT INFORMATION *(Single Charging Units)*

- Size: H 85.0” x W 36.5” x D 15.5”
- Display Size: H 48” x W 27
- Power Type: 208/240VAC, 48A, 10kW max; UL 2202
- Plug: SAE J1772 compliant connector

POWER REQUIREMENTS

- Charging unit: 60A/2P, 208/240 breaker
- Display/connectivity: 20A/1P, 120V breaker

INSTALLATION REQUIREMENTS

- Wire Diameter: #6 AWG minimum. Larger for longer conduit runs
- Conduit Diameter: 1.5” minimum per station. Larger conduit required for runs over 250’

55” Media Display

Charges up to 30miles per hour

Universal J1772 connections

Cable Management

Fully Networked

volta

Proprietary & Confidential – Do Not Distribute

NOTE: THE ORIGINAL SIZE OF THIS PLAN IS 24" X 36". SCALE RATIO IS NOT VALID FOR REDUCED OR ENLARGED SHEET SIZES

VOLTA
155 DE HARO STREET
SAN FRANCISCO, CA 94103

Kimley»Horn
1 N LEXINGTON AVE, SUITE 505
WHITE PLAINS, NY 10601
Main: (914) 368-9200 | www.kimley-horn.com
© 2021 Kimley-Horn Engineering and Landscape Architecture of New York, P.C

REV	DATE	DESCRIPTION	BY
1	04/01/2021	CD90s	JC
2	05/12/2021	COMMENTS PER VOLTA	JC
3	06/08/2021	COMMENTS PER VOLTA	LT

ISSUE DATE
06/08/2021

ISSUED FOR
REVIEW

FOR REFERENCE ONLY, DESIGNED AND PROVIDED BY OTHERS.

IT IS A VIOLATION OF LAW FOR ANY PERSON, UNLESS THEY ARE ACTING UNDER THE DIRECTION OF A LICENSED PROFESSIONAL ENGINEER, TO ALTER THIS DOCUMENT.

JEFFERSON VALLEY MALL

650 LEE BOULEVARD YORKTOWN HEIGHTS, NY 10598

SHEET TITLE
VOLTA STATION OVERVIEW

SHEET NUMBER
C0-02

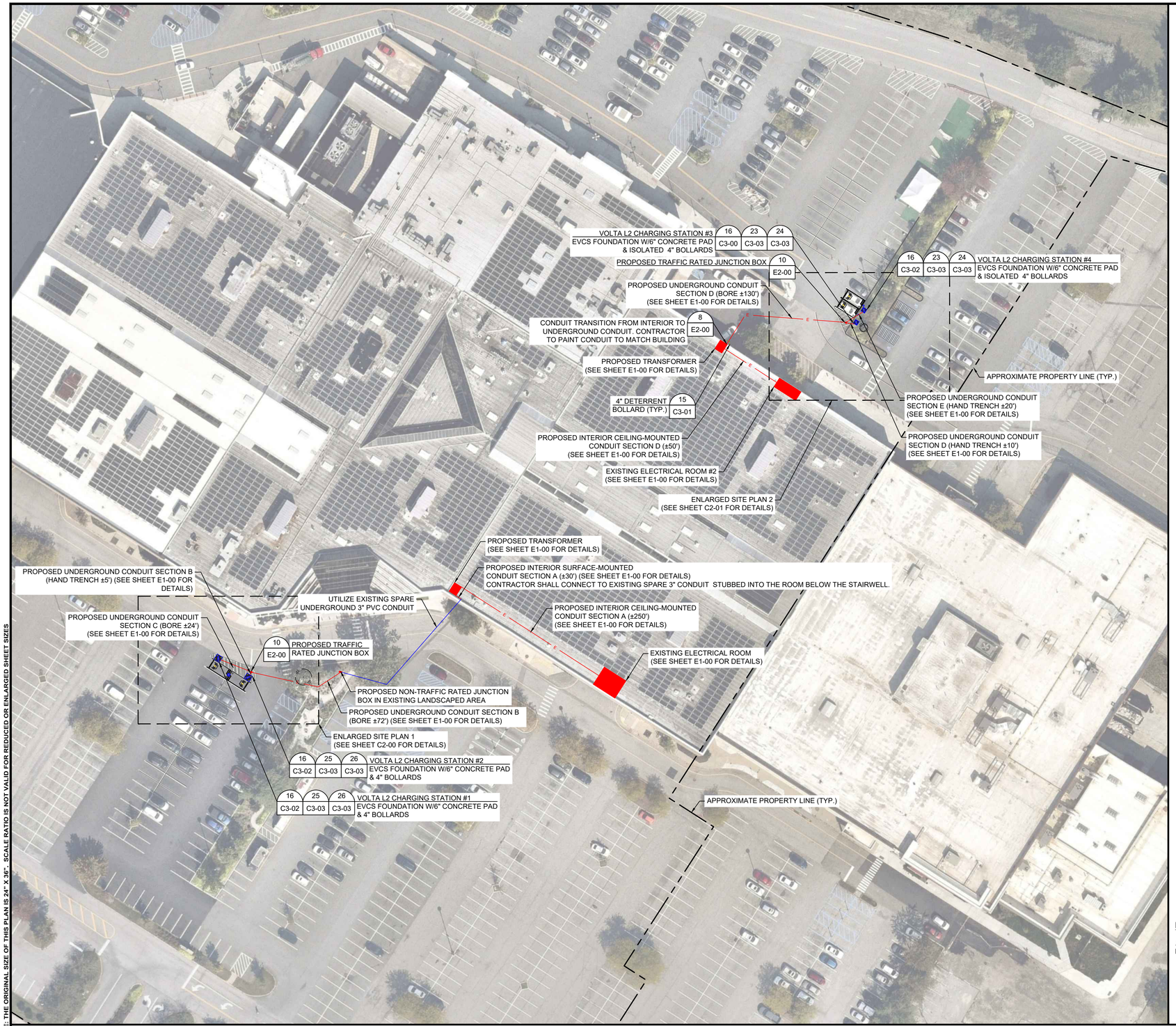

NOTE: THE ORIGINAL SIZE OF THIS PLAN IS 24" X 36". SCALE RATIO IS NOT VALID FOR REDUCED OR ENLARGED SHEET SIZES

OVERALL SITE PLAN

DISCLAIMER

THESE DRAWINGS WERE PRODUCED WITHOUT THE BENEFIT OF A CURRENT LAND SURVEY. ALL PROPERTY LINES, EASEMENTS, SETBACKS, EXISTING INFRASTRUCTURE AND TITLE DOCUMENTS SHALL BE VERIFIED PRIOR TO START OF CONSTRUCTION. KIMLEY-HORN AND VOLTA DO NOT GUARANTEE THE ACCURACY OF SAID PROPERTY LINES, EASEMENTS, SETBACKS, EXISTING INFRASTRUCTURE AND TITLE DOCUMENTS.

CONTRACTOR IS RESPONSIBLE FOR VERIFYING ALL FIELD CONDITIONS AND IS TO ALERT THE ENGINEER AND VOLTA OF ANY DISCREPANCIES PRIOR TO STARTING CONSTRUCTION. CONTRACTOR TO COORDINATE WITH VOLTA PM FOR ALL FINAL PLACEMENTS OF INFRASTRUCTURE.

CONSTRUCTION NOTES:

1. CONTRACTOR RESPONSIBILITIES CONSISTS OF, BUT NOT LIMITED TO, CHARGING STATION MOUNTING, FOUNDATION CONSTRUCTION, CONDUIT INSTALLATION, AND WIRING.
2. CONTRACTOR TO PAINT PROPOSED EV PARKING STALLS PER JURISDICTIONAL REQUIREMENTS.
3. CONTRACTOR TO INSTALL TREE PROTECTION FENCING PRIOR TO ANY CONSTRUCTION ACTIVITY. SEE SHEET C3-01 FOR DETAILS.
4. EXACT STATION PLACEMENT AND ROTATION ANGLE MAY VARY SLIGHTLY UPON INSTALLATION DEPENDING ON SITE CONDITIONS.
5. CONTRACTOR TO FIELD VERIFY ALL STALL DIMENSIONS AND ALL EQUIPMENT LOCATIONS TO ENSURE SUFFICIENT SPACE IS AVAILABLE.
6. CONTRACTOR SHALL TAKE NECESSARY PRECAUTIONS WHEN DRILLING INTO EXISTING CIP SLAB AND CIP DROP PANELS TO AVOID DAMAGE TO ANY REINFORCING AND EXISTING STRUCTURAL COMPONENTS.
7. USE APPROVED ASTM METHOD (X-RAY, PACOMETER, GPR, ETC.) TO LOCATE MILD STEEL AND PRE-STRESSING TENDONS PRIOR TO DRILLING. DO NOT CUT OR DRILL THROUGH ANY EXISTING REINFORCING. ADJUST LOCATION AS NECESSARY TO AVOID EXISTING REINFORCING.ENSURE 1" GAP MIN. BETWEEN REBAR AND ANCHORAGE.
8. CONDUIT RUN TO HANG FROM CEILING THROUGH PARKING GARAGE AND PENETRATE FLOOR/WALL ONLY AS NEEDED.
9. VOLTA WILL MAKE EVERY EFFORT TO FOLLOW, WITH THEIR PROPOSED CONDUIT, AN EXISTING CONDUIT ROUTE FROM ELECTRICAL ROOM TO PROPOSED STATION PLACEMENTS. WHEN AN EXISTING ROUTE IS NOT AVAILABLE, VOLTA WILL MAKE EVERY EFFORT TO CONCEAL/HIDE, PAINT AND MINIMIZE VISUAL IMPACT OF CONDUITS ANYWHERE THEY MAY BE VISIBLE TO THE PUBLIC.
10. CONTRACTOR IS RESPONSIBLE TO LOCATE ALL VERTICAL AND HORIZONTAL UTILITIES PRIOR TO DIRECTIONAL BORING. ANY ALTERATIONS TO THE PROPOSED CONDUIT ROUTE ARE TO BE COORDINATED WITH THE PROFESSIONAL ENGINEER(S) PRIOR TO CONSTRUCTION.
11. ANY ITEMS TO REMAIN THAT ARE DAMAGED BY THE CONTRACTOR SHALL BE REPLACED TO THE EXISTING CONDITION OR BETTER AT THE CONTRACTOR'S EXPENSE.
12. CONTRACTOR TO LOCATE JUNCTION BOX OR APPROVED ALTERNATIVE FOR SITE SPECIFIC RUN LENGTHS AND BENDS.

PARKING NOTE:

1. FOR THE PURPOSE OF THIS PLAN IT IS ASSUMED THERE IS ADEQUATE PARKING IN EXISTING CONDITIONS TO CONVERT 4 PARKING STALLS TO 4 EV PARKING STALLS.

REFERENCE NOTE:

1. SEE PROJECT LEGEND ON SHEET C0-01 FOR SYMBOLS AND LINE TYPE DESCRIPTIONS.

IMAGE REFERENCE:

AERIAL IMAGE(S) PROVIDED BY NEARMAP
IMAGERY ©2021 Nearmap, HERE

nearmap current : clear : change

GRAPHIC SCALE IN FEET
0 20 40 80

VOLTA
155 DE HARO STREET
SAN FRANCISCO, CA 94103

Kimley»Horn
1 N LEXINGTON AVE, SUITE 505
WHITE PLAINS, NY 10601
Main: (914) 368-9200 | www.kimley-horn.com
© 2021 Kimley-Horn Engineering and Landscape Architecture of New York, P.C

REV	DATE	DESCRIPTION	BY
1	04/01/2021	CD90s	JC
2	05/12/2021	COMMENTS PER VOLTA	JC
3	06/08/2021	COMMENTS PER VOLTA	LT

ISSUE DATE
06/08/2021

ISSUED FOR
REVIEW

IT IS A VIOLATION OF LAW FOR ANY PERSON, UNLESS THEY ARE ACTING UNDER THE DIRECTION OF A LICENSED PROFESSIONAL ENGINEER, TO ALTER THIS DOCUMENT.

JEFFERSON VALLEY MALL

650 LEE BOULEVARD YORKTOWN HEIGHTS, NY 10598

SHEET TITLE
OVERALL SITE PLAN

SHEET NUMBER
C1-00

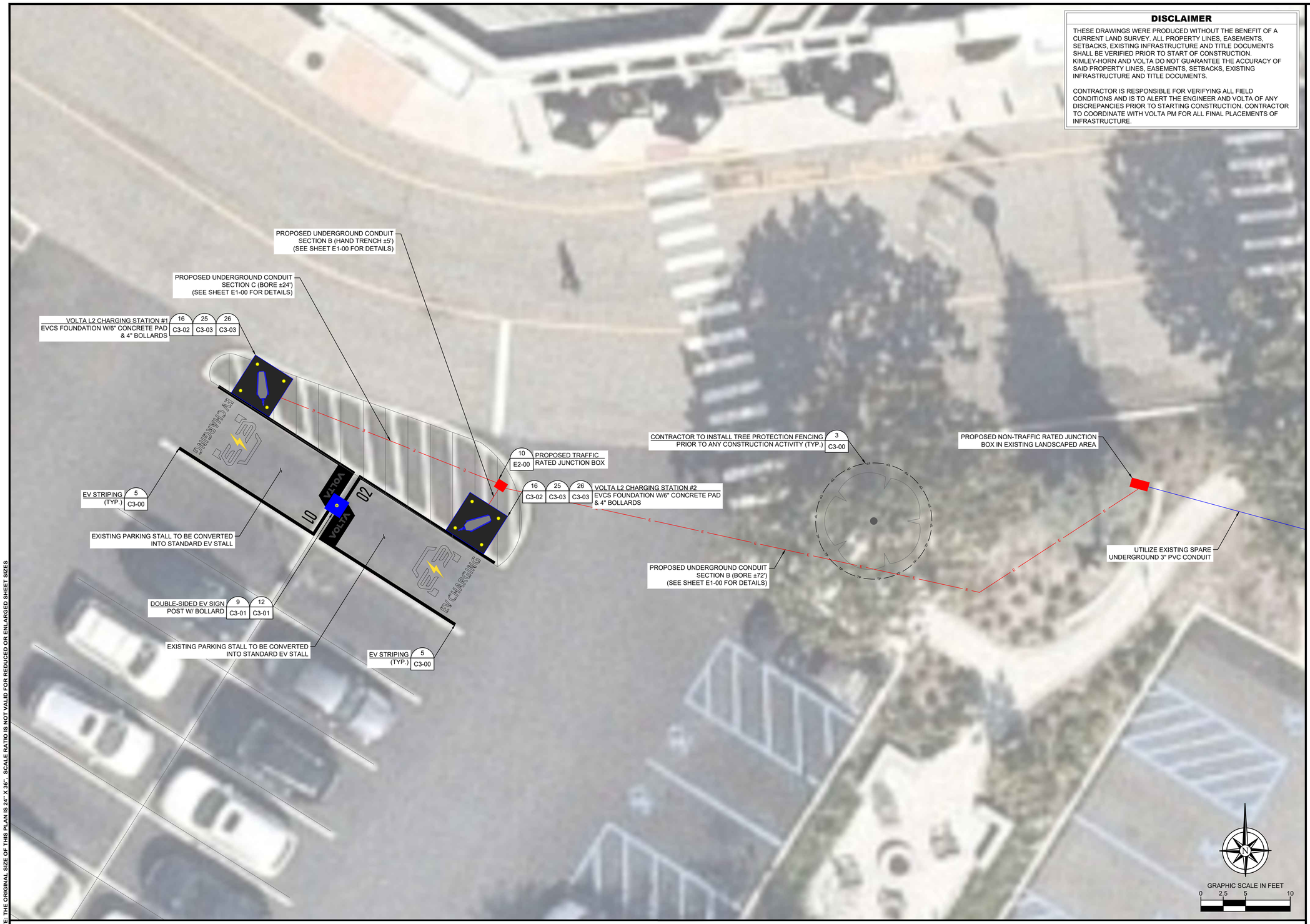

NOTE: THE ORIGINAL SIZE OF THIS PLAN IS 24" X 36". SCALE RATIO IS NOT VALID FOR REDUCED OR ENLARGED SHEET SIZES

ENLARGED SITE PLAN

DISCLAIMER

THESE DRAWINGS WERE PRODUCED WITHOUT THE BENEFIT OF A CURRENT LAND SURVEY. ALL PROPERTY LINES, EASEMENTS, SETBACKS, EXISTING INFRASTRUCTURE AND TITLE DOCUMENTS SHALL BE VERIFIED PRIOR TO START OF CONSTRUCTION. KIMLEY-HORN AND VOLTA DO NOT GUARANTEE THE ACCURACY OF SAID PROPERTY LINES, EASEMENTS, SETBACKS, EXISTING INFRASTRUCTURE AND TITLE DOCUMENTS.

CONTRACTOR IS RESPONSIBLE FOR VERIFYING ALL FIELD CONDITIONS AND IS TO ALERT THE ENGINEER AND VOLTA OF ANY DISCREPANCIES PRIOR TO STARTING CONSTRUCTION. CONTRACTOR TO COORDINATE WITH VOLTA PM FOR ALL FINAL PLACEMENTS OF INFRASTRUCTURE.

VOLTA

155 DE HARO STREET
SAN FRANCISCO, CA 94103

Kimley»Horn

1 N LEXINGTON AVE, SUITE 505
WHITE PLAINS, NY 10601
Main: (914) 368-9200 | www.kimley-horn.com
© 2021 Kimley-Horn Engineering and Landscape Architecture of New York, P.C

REV	DATE	DESCRIPTION	BY
1	04/01/2021	CD90s	JC
2	05/12/2021	COMMENTS PER VOLTA	JC
3	06/08/2021	COMMENTS PER VOLTA	LT

ISSUE DATE

06/08/2021

ISSUED FOR

REVIEW

IT IS A VIOLATION OF LAW FOR ANY PERSON, UNLESS THEY ARE ACTING UNDER THE DIRECTION OF A LICENSED PROFESSIONAL ENGINEER, TO ALTER THIS DOCUMENT.

JEFFERSON VALLEY MALL

**650 LEE BOULEVARD
YORKTOWN HEIGHTS,
NY 10598**

SHEET TITLE

ENLARGED SITE PLAN

SHEET NUMBER

C2-00

DISCLAIMER

THESE DRAWINGS WERE PRODUCED WITHOUT THE BENEFIT OF A CURRENT LAND SURVEY. ALL PROPERTY LINES, EASEMENTS, SETBACKS, EXISTING INFRASTRUCTURE AND TITLE DOCUMENTS SHALL BE VERIFIED PRIOR TO START OF CONSTRUCTION. KIMLEY-HORN AND VOLTA DO NOT GUARANTEE THE ACCURACY OF SAID PROPERTY LINES, EASEMENTS, SETBACKS, EXISTING INFRASTRUCTURE AND TITLE DOCUMENTS.

CONTRACTOR IS RESPONSIBLE FOR VERIFYING ALL FIELD CONDITIONS AND IS TO ALERT THE ENGINEER AND VOLTA OF ANY DISCREPANCIES PRIOR TO STARTING CONSTRUCTION. CONTRACTOR TO COORDINATE WITH VOLTA PM FOR ALL FINAL PLACEMENTS OF INFRASTRUCTURE.

VOLTA

155 DE HARO STREET
SAN FRANCISCO, CA 94103

Kimley»Horn

1 N LEXINGTON AVE, SUITE 505
WHITE PLAINS, NY 10601
Main: (914) 368-9200 | www.kimley-horn.com

© 2021 Kimley-Horn Engineering and Landscape Architecture of New York, P.C

REV	DATE	DESCRIPTION	BY
1	04/01/2021	CD90s	JC
2	05/12/2021	COMMENTS PER VOLTA	JC
3	06/08/2021	COMMENTS PER VOLTA	LT

ISSUE DATE

06/08/2021

ISSUED FOR

REVIEW

IT IS A VIOLATION OF LAW FOR ANY PERSON, UNLESS THEY ARE ACTING UNDER THE DIRECTION OF A LICENSED PROFESSIONAL ENGINEER, TO ALTER THIS DOCUMENT.

JEFFERSON VALLEY MALL

650 LEE BOULEVARD YORKTOWN HEIGHTS, NY 10598

SHEET TITLE

ENLARGED SITE PLAN

SHEET NUMBER

C2-01

1. UNLESS NOTED OTHERWISE, THE FOLLOWING NOTES RELATING TO THE "SITE DETAILS" SHEETS SHALL GOVERN.
2. COMPRESSIVE STRENGTH OF CONCRETE FOUNDATION SHALL BE A MINIMUM OF 4,500 PSI AT 28 DAYS WITH MAXIMUM W/CM RATIO OF 0.45 AND AIR-CONTENT OF 5% +/- 1.5%.
3. MINIMUM YIELD STRENGTH OF REINFORCEMENT TO BE 60,000 PSI (ASTM-A615).
4. REFERENCE CIVIL AND ELEC DRAWING FOR EQUIPMENT LAYOUT, LOCATION OF CONDUIT, ETC.
5. FINAL ANCHOR BOLT AND POLE DESIGN INCLUDING SIZE AND CONFIGURATION ARE BY MFR.
6. BEFORE STARTING ANY WORK, THE CONTRACTOR SHALL VERIFY ALL DIMENSIONS ON THE SITE AND REPORT ANY DISCREPANCIES IMMEDIATELY TO THE ENGINEER.
7. NO GEOTECHNICAL ENGINEERING REPORT WAS PROVIDED BY THE OWNER. FOUNDATION DESIGN IS BASED ON A MINIMUM OF 1,500 PSF NET ALLOWABLE BEARING PRESSURE ON UNDISTURBED NATURAL SOIL OR COMPACTED FILL UNLESS OTHERWISE NOTED.
8. UNLESS OTHERWISE DIRECTED BY THE OWNER, ALL FOUNDATION WORK RELATED TO INSTALLATION OF REBAR SHALL BE INSPECTED BY OTHERS.
9. KIMLEY-HORN AND ASSOCIATES, INC. IS NOT RESPONSIBLE FOR THE DESIGN OF THE EQUIPMENT OR ANCHORAGE TO THE FOUNDATION. MANUFACTURER SHALL SUBMIT LOADS TO ENGINEER FOR RECORD KEEPING PURPOSES ONLY.
10. DESIGN IS BASED ON THE SPECIFIC EQUIPMENT SHOWN IN THESE DRAWINGS AND ILLUSTRATED ON THE VOLTA CUT SHEETS.
11. ALL MATERIALS SHALL BE IN ACCORDANCE WITH THE LOCAL DEPARTMENT OF TRANSPORTATION SPECIFICATIONS.
12. ALL FOUNDATIONS ARE TO INCLUDE COMPACTED SUBGRADE AND MINIMUM 6" COMPACTED STONE BASE UNLESS OTHERWISE SPECIFIED.
13. BUILDING CODE: IBC 2018
    - 13.1.1. DESIGN LOADS
    - 13.1.2. DEAD LOAD: SELF WEIGHT
    - 13.1.3. LIVE LOAD: BOLLARDS ARE NOT DESIGNED FOR FULL 6 KIP IMPACT LOAD UNLESS OTHERWISE NOTED "VEHICULAR RATED"
    - 13.1.4. WIND LOAD: ASCE 7-10
      - 13.1.4.1. OCCUPANCY CATEGORY = II
      - 13.1.1.2. WIND SPEED = 170 MPH
      - 13.1.1.3. EXPOSURE = B

GENERAL NOTES | SCALE N.T.S. | 1

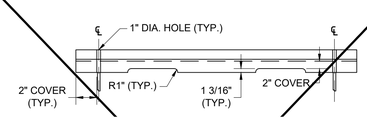

NOT USED

REINFORCE
DEF(

: PINS NO. 7
2" LONG (MIN.)
ANCHOR PINS SHALL BE RECESSED 1 IN.

SECTION VIEW

NOTES:
1. PRECAST CONCRETE WHEEL STOPS SHALL BE LOCATED AS SHOWN ON THE PLANS. THEN SECURED IN PLACE WITH TWO (2) NO. 7 REINFORCEMENT BARS PER WHEEL STOP.
2. COST OF THE REINFORCEMENT BARS WILL BE INCIDENTAL TO THE CONTRACT UNIT PRICE BID PER EACH FOR THE WHEEL STOPS.
3. WHEEL STOPS TO BE PAINTED WHITE IN ACCORDANCE WITH STRIPING GUIDELINES.

CONCRETE WHEEL STOP | SCALE N.T.S. | 2

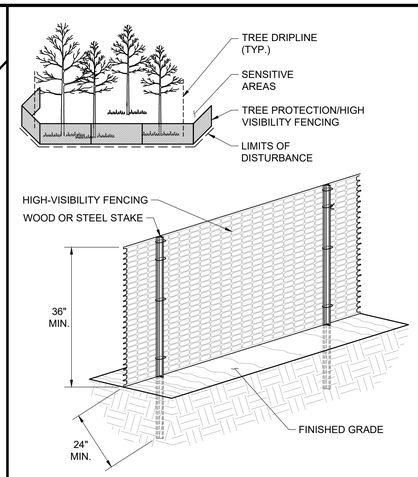

NOTE:
FURNISH AND INSTALL TEMPORARY HIGH-VISIBILITY FENCING AT CONSTRUCTION LIMITS PRIOR TO ANY LAND DISTURBANCE.

TREE PROTECTION | SCALE N.T.S. | 3

NOTES:
1. REMOTE CHARGING PEDESTAL TO BE PROVIDED BY VOLTA.
2. CHARGING CABLE TO BE ROUTED FROM EV KIOSK TO HOLSTER THROUGH UNDERGROUND CONDUIT AS SHOWN BELOW.
3. AT CONTRACTOR'S OPTION A 24" DIAMETER SONOTUBE OR EQUIVALENT FORMWORK MAY BE USED IN LIEU OF SQUARE FOUNDATION FOR STANDARD FLUSH FOUNDATION.
4. REMOTE PEDESTAL TO BE USED FOR LEVEL 2 STATIONS ONLY.
5. MAX CONDUIT DISTANCE DETERMINED BY VOLTAGE DROP ACROSS WIRE RUN FROM REMOTE HOLSTER TO CHARGING STATION. TOTAL VOLTAGE DROP IS FROM ELECTRICAL PANEL TO REMOTE PEDESTAL AND SHALL NOT EXCEED 3%. REFER TO VOLTAGE DROP TABLE.

VOLTAGE DROP TABLE

START POINT	END POINT	AMPERAGE (A)	VOLTAGE	DISTANCE (FT)	CONDUCTOR (AWG)	CONDUCTOR RESISTANCE	V.D.	V.D. %
EV#	REMOTE PEDESTAL	40	208	5	6	0.51	0.20	0.10
EV#	REMOTE PEDESTAL	40	208	20	6	0.51	0.82	0.39
EV#	REMOTE PEDESTAL	40	208	35	6	0.51	1.43	0.69
EV#	REMOTE PEDESTAL	40	208	50	6	0.51	2.04	0.98

REMOTE PEDESTAL STANDARD FLUSH FOUNDATION
(OUTSIDE OF VEHICLE IMPACT AND OVERHANG AREAS)

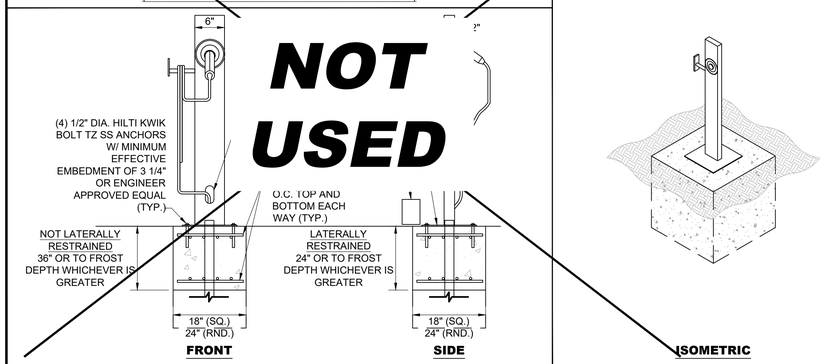

NOT USED

FLUSH REMOTE PEDESTAL FOUNDATION | SCALE N.T.S. | 4

FOR REFERENCE ONLY, DESIGNED AND PROVIDED BY OTHERS

Volta Charging

STRIPING GUIDELINES

PRODUCTS
Cement Background: Benjamin Moore Floor & Patio Battleship Blue N122 - 2X
S1 2 x 30.0 B11 x 0.0 G1 0 x 30.0
Asphalt Background: Latex-ite 4.75 Gal. Ultra Shield Driveway Filler Sealer
Traffic Paint: Sherwin Williams TM2153 LF Yellow TTP-1952D, TM2152 White TTP-1952D

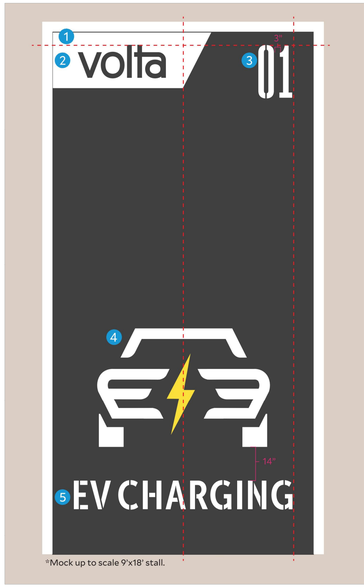

*Mock up to scale 9'x18' stall.

SURFACE PREP

Backgrounds are to only be painted for marquee locations or any location where the existing space has conflicting designations or is poor shape. For all other instances please proceed to branded striping.

CEMENT BACKGROUND:
For cement backgrounds please use battleship blue. All backgrounds must run edge-to-edge across the entire parking space.

ASPHALT BACKGROUND:
Asphalt should be resealed with sealcoat. All backgrounds must run edge-to-edge across the entire parking space.

BRANDED STRIPING

VOLTA LOGO:
Should match the overall background color of the parking stall (unless you are omitting the container shape according to other specs, if so paint it white).

LINES & STENCILS:
Use traffic grade yellow for the lightning bolt stencil. Use traffic grade white for all other lines and stencils.

1. SHAPE (WHITE) Place flush with the top left corner.

2. VOLTA LOGO Center within the shape.

3. NUMBERS (WHITE) The right number lines up flush right to the "G" in "CHARGING" and flush top with the Volta logo. There should be 3 inches in-between the left and right numbers. If stall is less than 8 feet, align numbers with the middle of the "G" (See page 2).

4. LETTERS Place centered, 4 inches from the bottom of the stall.

5. CAR Place centered 14 inches from the top of the letters.

volta

1 of 3

Founded in 2010. Designed in San Francisco, built to last in the USA. info@voltacharging.com

EV STRIPING GUIDELINES | SCALE N.T.S. | 5

FOR REFERENCE ONLY, DESIGNED AND PROVIDED BY OTHERS

Volta Charging

STRIPING GUIDELINES

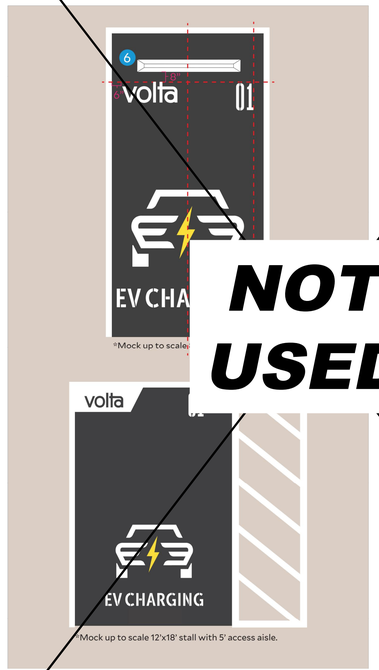

NOT USED

ABSOLUTELY DO NOT

- Paint only a portion of the background (edge-to-edge or not at all)
- Paint the lightning bolt, any color but yellow or white
- Only put 1 number in top right corner
- Paint the Volta logo any color other than white or Battleship Blue/Sealcoat

ACCESSORIES

EEL BLOCKS Place 8 inches above the ogo, centered within the stall. Wheel should be painted white.

ESS AISLE Should be painted white.

; No need to paint the curbs unless they nted an existing or conflicting color. If the case, paint the curb white.

volta

2 of 3

Founded in 2010. Designed in San Francisco, built to last in the USA. info@voltacharging.com

EV STRIPING GUIDELINES | SCALE N.T.S. | 6

FOR REFERENCE ONLY, DESIGNED AND PROVIDED BY OTHERS

Volta Charging

STRIPING GUIDELINES

*Mock up to scale 9'x14' stall at 45º angle.

NOT USED

DIAGONAL STALLS

1. SHAPE (SEE PAGE 1) Omit in diagonal spaces.

2. VOLTA LOGO (WHITE) 6 inches from the top line at the same angle as the stall lines.

3. NUMBERS (WHITE) The right number lines up flush right to the "G" in "CHARGING" and flush top with the Volta logo at same agle as the stall lines. There should be 3 inches in-between the left and right numbers. If stall is less than 8 feet, align numbers with the middle of the "G" (See diagram)

4. LETTERS Place centered, 4 inches from the bottom of the stall according to the top line.

Place centered 14 inches from the top of ers at the same angle as the stall lines.

EEL BLOCKS Place 8 inches above the ogo in the same angle as the stall lines. according to the space left in angled /heel Blocks should be painted white.

volta

3 of 3

Founded in 2010. Designed in San Francisco, built to last in the USA. info@voltacharging.com

EV STRIPING GUIDELINES | SCALE N.T.S. | 7

NOTE: THE ORIGINAL SIZE OF THIS PLAN IS 24" X 36". SCALE RATIO IS NOT VALID FOR REDUCED OR ENLARGED SHEET SIZES

VOLTA
155 DE HARO STREET
SAN FRANCISCO, CA 94103

Kimley»Horn
1 N LEXINGTON AVE, SUITE 505
WHITE PLAINS, NY 10601
Main: (914) 368-9200 | www.kimley-horn.com

© 2021 Kimley-Horn Engineering and Landscape Architecture of New York, P.C

REV	DATE	DESCRIPTION	BY
1	04/01/2021	CD90s	JC
2	05/12/2021	COMMENTS PER VOLTA	JC
3	06/08/2021	COMMENTS PER VOLTA	LT

ISSUE DATE
06/08/2021

ISSUED FOR
REVIEW

IT IS A VIOLATION OF LAW FOR ANY PERSON, UNLESS THEY ARE ACTING UNDER THE DIRECTION OF A LICENSED PROFESSIONAL ENGINEER, TO ALTER THIS DOCUMENT.

JEFFERSON VALLEY MALL
650 LEE BOULEVARD
YORKTOWN HEIGHTS, NY 10598

SHEET TITLE
SITE DETAILS

SHEET NUMBER
C3-00

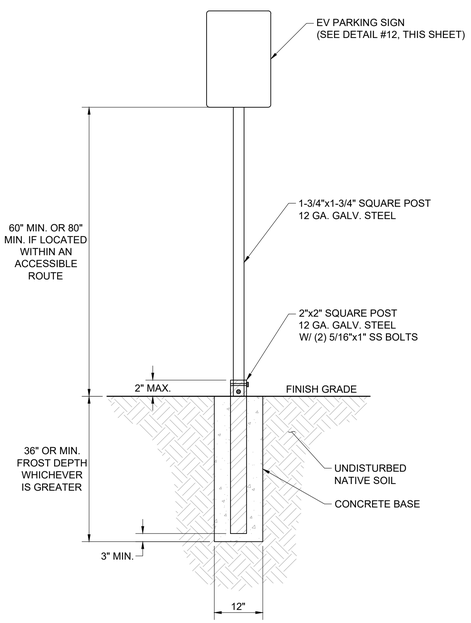

NOTES:
1. SIGN TO BE GREEN (PANTONE 355C) WITH WHITE LETTERING AND MUST BE REFLECTIVE LETTERING.
2. TO BE PLACED AT HEAD OF PARKING STALL.
3. POST MOUNTED OBJECTS PER ADA CODE SECTION 11B-307.3.
4. THIS DETAIL SHALL ONLY BE USED WHEN SIGN POST IS LOCATED OUTSIDE OF PARKING LOT PAVEMENT AND 2' CAR OVERHAND ZONE.

SIGN POST | SCALE N.T.S. | 8

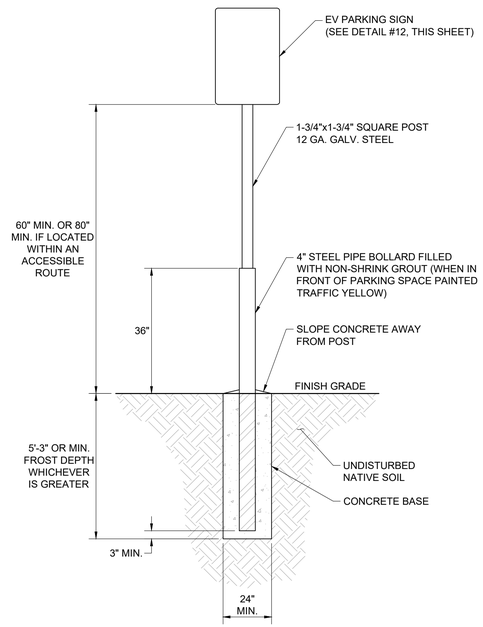

NOTES:
1. SIGN TO BE GREEN (PANTONE 355C) WITH WHITE LETTERING AND MUST BE REFLECTIVE LETTERING.
2. TO BE PLACED AT HEAD OF PARKING STALL.
3. POST MOUNTED OBJECTS PER ADA CODE SECTION 11B-307.3.
4. THIS DETAIL SHALL BE USED WHEN SIGN POST IS LOCATED IN PARKING LOT PAVEMENT, OR WITHIN 2' CAR OVERHAND ZONE.
5. REFER TO NOTES FOR ASSUMED GEOTECHNICAL 164 PARAMETERS. THIS SIGN DESIGN ASSUMES ASCE 7-10 WIND SPEED AND AN EXPOSURE CATEGORY B. IF EITHER OF THESE GEOTECHNICAL PROPERTIES OR ASCE 7-10 WIND PARAMETERS DIFFER BASED ON LOCATION THE DESIGN MUST BE UPDATED BY A STRUCTURAL ENGINEER.

SIGN POST W/BOLLARD | SCALE N.T.S. | 9

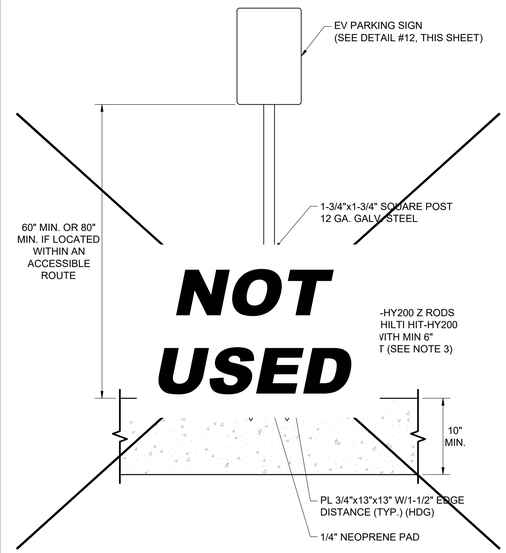

NOTES:
1. SIGN TO BE GREEN (PANTONE 355C) WITH WHITE LETTERING AND MUST BE REFLECTIVE LETTERING.
2. TO BE PLACED AT HEAD OF PARKING STALL.
3. POST MOUNTED OBJECTS PER ADA CODE SECTION 11B-307.3.
4. SIGN AND POST ARE NOT IMPACT RATED UNLESS OTHERWISE NOTED.
5. PRIOR TO DRILLING, CONTRACTOR SHALL VERIFY THICKNESS OF EXISTING CONCRETE SLAB IS AT LEAST 10" AND THAT 6" ANCHOR EMBEDMENT CAN BE PROVIDED.

POST INSTALLED SIGN POST | SCALE N.T.S. | 10

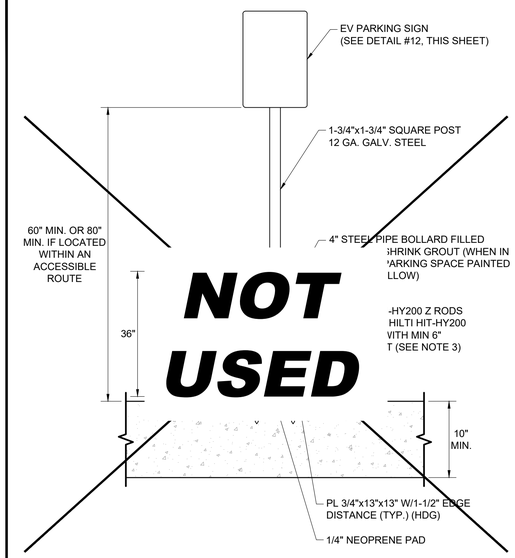

NOTES:
1. SIGN TO BE GREEN (PANTONE 355C) WITH WHITE LETTERING AND MUST BE REFLECTIVE LETTERING.
2. TO BE PLACED AT HEAD OF PARKING STALL.
3. POST MOUNTED OBJECTS PER ADA CODE SECTION 11B-307.3.
4. SIGN AND POST ARE NOT IMPACT RATED UNLESS OTHERWISE NOTED.
5. PRIOR TO DRILLING, CONTRACTOR SHALL VERIFY THICKNESS OF EXISTING CONCRETE SLAB IS AT LEAST 10" AND THAT 6" ANCHOR EMBEDMENT CAN BE PROVIDED.

POST INSTALLED SIGN POST W/BOL. | SCALE N.T.S. | 11

FOR REFERENCE ONLY, DESIGNED AND PROVIDED BY OTHERS.

NO TIME LIMIT SIGN
STADIUMS, OTHER VENUES, ECT.

45 MIN. TIME LIMIT SIGN
FAST FOOD RESTAURANTS, ECT.

1 HR. TIME LIMIT SIGN
DRUG STORES OR SIMILAR QUICK/CONVENIENCE SITES

2 HR. TIME LIMIT SIGN
GROCERY STORES, MALLS, ECT.

3 HR. TIME LIMIT SIGN
MOVIE THEATERS, ENTERTAINMENT CENTERS, ECT.

30 MIN. TIME LIMIT SIGN
DCFC STALLS

SIGN INSTALLATION TYPE:
CONTRACTOR SHALL COORDINATE WITH VOLTA TO DETERMINE EVCS SIGN TYPE PRIOR TO INSTALLATION.

SIGN INSTALLATION HEIGHT:
ALL SIGNS TO BE INSTALLED AT 60" ABOVE FINISH FLOOR. IF SIGNS ARE LOCATED WITHIN AN ACCESSIBLE ROUTE, THEY WILL BE INSTALLED AT 80" ABOVE FINISHED FLOOR. MEASUREMENTS ARE TAKEN FROM BOTTOM OF LOWEST SIGN.

SIGN REQUIREMENTS | SCALE N.T.S. | 12

FOR REFERENCE ONLY, DESIGNED AND PROVIDED BY OTHERS.

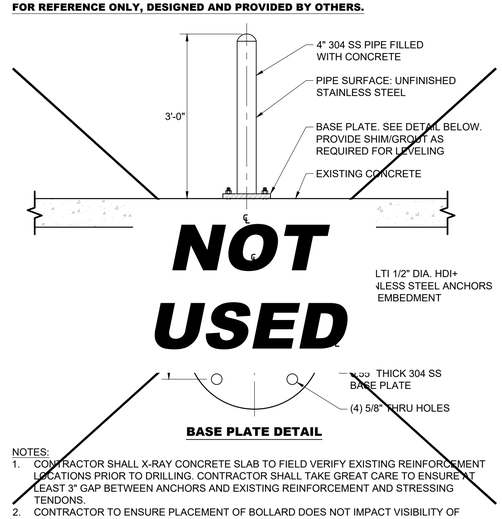

NOTES:
1. CONTRACTOR SHALL X-RAY CONCRETE SLAB TO FIELD VERIFY EXISTING REINFORCEMENT LOCATIONS PRIOR TO DRILLING. CONTRACTOR SHALL TAKE GREAT CARE TO ENSURE AT LEAST 3" GAP BETWEEN ANCHORS AND EXISTING REINFORCEMENT AND STRESSING TENDONS.
2. CONTRACTOR TO ENSURE PLACEMENT OF BOLLARD DOES NOT IMPACT VISIBILITY OF STATION SCREEN.
3. CONTRACTOR TO ENSURE BOLLARD PLACEMENT DOES NOT OBSTRUCT 3' DOOR SWING ON BOTH SIDES OF MEDIA STATION.
4. **BOLLARDS ARE NOT DESIGNED FOR VEHICULAR IMPACT.**

4" DETERRENT BOL. W/ BASE PLATE | SCALE N.T.S. | 13

FOR REFERENCE ONLY, DESIGNED AND PROVIDED BY OTHERS.

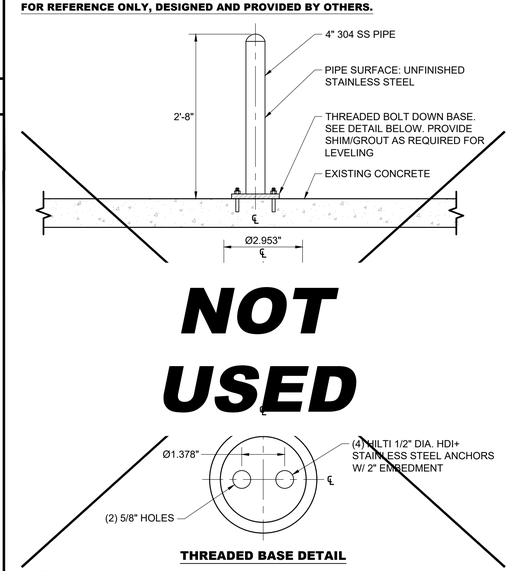

NOTES:
1. CONTRACTOR SHALL X-RAY CONCRETE SLAB TO FIELD VERIFY EXISTING REINFORCEMENT LOCATIONS PRIOR TO DRILLING. CONTRACTOR SHALL TAKE GREAT CARE TO ENSURE AT LEAST 3" GAP BETWEEN ANCHORS AND EXISTING REINFORCEMENT AND STRESSING TENDONS.
2. CONTRACTOR TO ENSURE PLACEMENT OF BOLLARD DOES NOT IMPACT VISIBILITY OF STATION SCREEN.
3. CONTRACTOR TO ENSURE BOLLARD PLACEMENT DOES NOT OBSTRUCT 3' DOOR SWING ON BOTH SIDES OF MEDIA STATION.
4. **BOLLARDS ARE NOT DESIGNED FOR VEHICULAR IMPACT.**

4" DETERRENT BOL. W/ THREADED BASE | SCALE N.T.S. | 14

FOR REFERENCE ONLY, DESIGNED AND PROVIDED BY OTHERS.

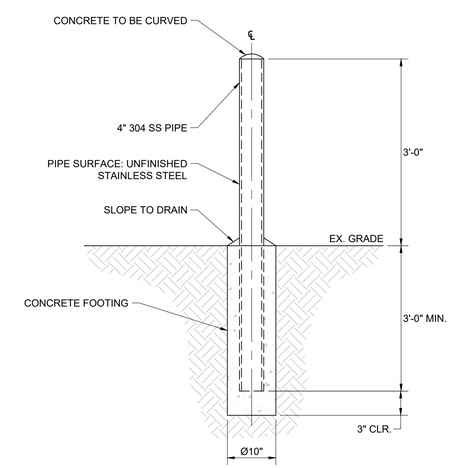

NOTES:
1. CONTRACTOR TO ENSURE PLACEMENT OF BOLLARD DOES NOT IMPACT VISIBILITY OF STATION SCREEN.
2. CONTRACTOR TO ENSURE BOLLARD PLACEMENT DOES NOT OBSTRUCT 3' DOOR SWING ON BOTH SIDES OF MEDIA STATION.
3. **BOLLARDS ARE NOT DESIGNED FOR VEHICULAR IMPACT.**

4" DETERRENT BOLLARD | SCALE N.T.S. | 15

NOTE: THE ORIGINAL SIZE OF THIS PLAN IS 24" X 36". SCALE RATIO IS NOT VALID FOR REDUCED OR ENLARGED SHEET SIZES

VOLTA
155 DE HARO STREET
SAN FRANCISCO, CA 94103

Kimley»Horn
1 N LEXINGTON AVE, SUITE 505
WHITE PLAINS, NY 10601
Main: (914) 368-9200 | www.kimley-horn.com

© 2021 Kimley-Horn Engineering and Landscape Architecture of New York, P.C

REV	DATE	DESCRIPTION	BY
1	04/01/2021	CD90s	JC
2	05/12/2021	COMMENTS PER VOLTA	JC
3	06/08/2021	COMMENTS PER VOLTA	LT

ISSUE DATE
06/08/2021

ISSUED FOR
REVIEW

IT IS A VIOLATION OF LAW FOR ANY PERSON, UNLESS THEY ARE ACTING UNDER THE DIRECTION OF A LICENSED PROFESSIONAL ENGINEER, TO ALTER THIS DOCUMENT.

JEFFERSON VALLEY MALL
650 LEE BOULEVARD
YORKTOWN HEIGHTS, NY 10598

SHEET TITLE
SITE DETAILS

SHEET NUMBER
C3-01

FOR REFERENCE ONLY, DESIGNED AND PROVIDED BY OTHERS.

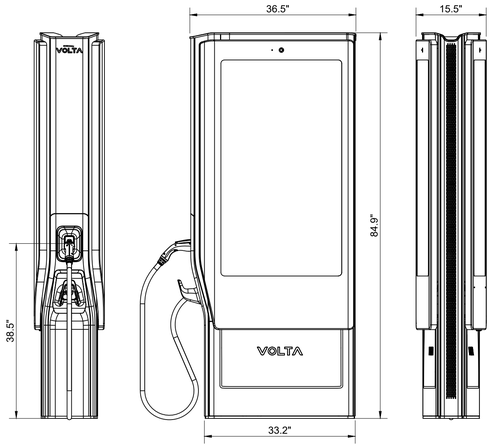

FRONT | SIDE (2x DISPLAYS) | BACK | PLAN

CHARGER SPECIFICATIONS:
SIZE: H 85.0" x W 36.5" x D 15.5"
CORD LENGTH: 12.5'
POWER TYPE: 208/240VAC, 50A (MAX), 10 kW MAX.
PLUG: SAE J1772 COMPLIANT CONNECTOR
LISTINGS: UL E354307

POWER REQUIREMENTS:
CHARGING UNIT: 60A/2P 208/240V BREAKER
STATION AUX POWER: 20A/1P 120V BREAKER

NOTES:
1. THE GRIP RANGE FOR THE CHARGE CABLE BEGINS AT 38.5" ABOVE PARKING SURFACE.
2. SEE DETAILS 17 & 19, THIS SHEET FOR MORE INFORMATION.

VOLTA V4 L2 EVCS | SCALE N.T.S. | 16

FOR REFERENCE ONLY, DESIGNED AND PROVIDED BY OTHERS.

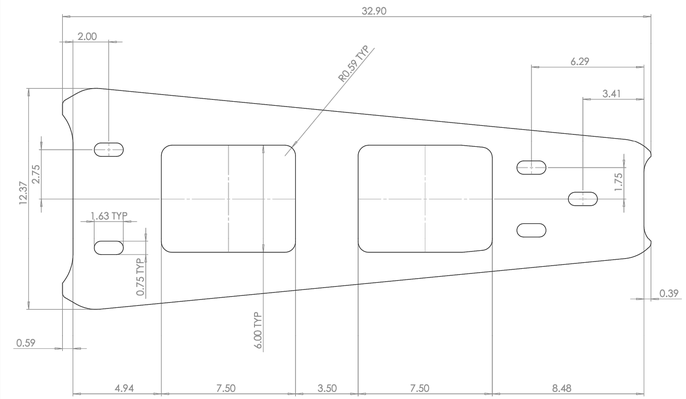

NOTE:
1. DEFER TO DETAIL 18 FOR BASE PLATE ANCHORAGE.

VOLTA V4 BASE PLATE | SCALE N.T.S. | 17

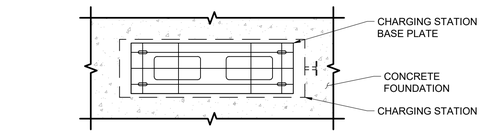

CHARGING STATION BASE PLAN VIEW

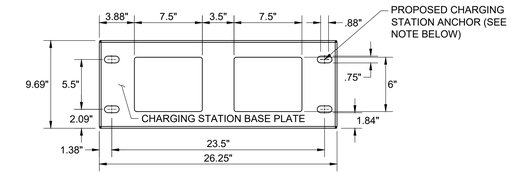

CHARGING STATION BASE PLATE PLAN VIEW

NOTES:
1. CONTRACTOR TO VERIFY POST INSTALLATION OR CAST IN PLACE ANCHOR AS LISTED BELOW BASED ON FIELD MEASUREMENTS AND JURISDICTIONAL REQUIREMENTS.
2. CONTRACTOR TO VERIFY EXISTING CONCRETE SLAB THICKNESS AND MAINTAIN 2" MINIMUM COVER OF CONCRETE BELOW EMBEDDED ANCHORS.

CAST IN PLACE ANCHOR:
MINIMUM EFFECTIVE EMBEDMENT OF 2" OR ENGINEER APPROVED EQUAL.

POST INSTALLATION MECHANICAL ANCHOR:
(4) 1/2" DIAMETER HILTI KWIK BOLT TZ-SS304 ANCHOR ROD WITH MINIMUM EFFECTIVE EMBEDMENT OF 3-1/4" OR ENGINEERING APPROVED EQUAL.

VOLTA BASE PLATE ANCHORAGE | SCALE N.T.S. | 18

VOLTA
155 DE HARO STREET
SAN FRANCISCO, CA 94103

Kimley»Horn
1 N LEXINGTON AVE, SUITE 505
WHITE PLAINS, NY 10601
Main: (914) 368-9200 | www.kimley-horn.com

© 2021 Kimley-Horn Engineering and Landscape Architecture of New York, P.C

REV	DATE	DESCRIPTION	BY
1	04/01/2021	CD90s	JC
2	05/12/2021	COMMENTS PER VOLTA	JC
3	06/08/2021	COMMENTS PER VOLTA	LT

ISSUE DATE
06/08/2021

ISSUED FOR
REVIEW

IT IS A VIOLATION OF LAW FOR ANY PERSON, UNLESS THEY ARE ACTING UNDER THE DIRECTION OF A LICENSED PROFESSIONAL ENGINEER, TO ALTER THIS DOCUMENT.

JEFFERSON VALLEY MALL
650 LEE BOULEVARD
YORKTOWN HEIGHTS, NY 10598

SHEET TITLE
SITE DETAILS

SHEET NUMBER
C3-02

FOR REFERENCE ONLY, DESIGNED AND PROVIDED BY OTHERS.

Level 2 Media Station

volta

Volta Charging is driving the transition to clean electric transportation by transforming properties with electric vehicle charging. No longer will people drive to fuel, but fuel where they drive.

Volta's turn-key electric vehicle charging is tailored to each location's needs and desired customer experience to increase traffic and customer engagement. Our fully integrated EV chargers include high-impact digital media screens that provide properties with branding and messaging as well as additional revenue opportunities.

Charger Specs
- Output power: 10 kW max (AC)
- Safety certification: UL 2202

Power Requirements
- Input voltage: 208 - 240 VAC
- Output voltage: 208 - 240 VAC
- Circuit size: 60A/2P, 208/240 breaker
- Network connectivity: Cell connection or LAN access

Display Screen Specs
- Size: 55" outdoor LED back light system x2
- Picture: Full HD 1080p resolution
- Power requirements: 20A/1P, 120V breaker
- File type: JPEG or PNG

Installation Requirements
- Foundation req: 36"L x 36"W x 36"D
- Conduit diameter: 1.5" min per station approx*

*Separate conduit for communication maybe required

Example Level 2 Media Foundation Plans

Bolt Down | Concrete Footing

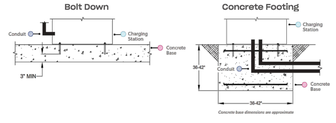

voltacharging.com | 770-00002-A

VOLTA V4 EVCS CUT SHEET | SCALE N.T.S. | 19

FOR REFERENCE ONLY, DESIGNED AND PROVIDED BY OTHERS.

eMOBILITY SOLUTIONS

innogy

eClick
Data sheet

General and electrical specifications	eClick
Charging power	up to 10.4 kW / 12 kW (up to 50 A)
Mains input power	208 Volt AC WYE system, 50 A, 10.4 kW 240 Volt AC split phase, 50 A, 12 kW 240 Volt AC Center Tap Delta, 50 A, 12 kW
Output power to eBox	208 Volt AC WYE system, 50 A, 10.4 kW 240 Volt AC split phase, 50 A, 12 kW 240 Volt AC Center Tap Delta, 50 A, 12 kW maximum output depends on local distribution grid
Storage temperature	-22 °F to + 176 °F (-30 °C to +80 °C)
IP	I
Max line cross section	Max supply line (top or bottom entry): AWG (10 mm²)
Certifications	UL and FCC (tested and confirmed by a certified body)
Packaging dimensions (W x D x H)	1'-8 1/4" x 8 4/5" x 3" (515 mm x 225 mm x 75 mm)

Recommended additional accessories	eClick
Short circuit / overload protection installed in sub-distribution per charge port	Circuit breaker required according to national law and regulations. Electrical installer to choose correct circuit breaker depending on grid type and power.

Broadband TelCom Power, Inc.
1719 S. Grand Ave.
Santa Ana, CA 92705, USA
sales@btcpower.com
www.btcpower.com

ECLICK DATA CUT SHEET | SCALE N.T.S. | 20

FOR REFERENCE ONLY, DESIGNED AND PROVIDED BY OTHERS.

eMOBILITY SOLUTIONS

innogy

eBox professional
Data sheet

General and electrical specifications	eBox professional
Charging power	up to 10.4 kW (WYE) / up to 12 kW (split phase/center tap delta) (up to 50 A)
Applications	Protected internal areas; unprotected exterior areas exposed to rain and direct sunlight
Enclosure Rating	Type 3S
Operating temperature	-22 °F to 122 °F (-30 °C to +50 °C) full load Thermal overload protection: output power reduced at higher temperatures
Storage temperature	-22 °F to + 176 °F (-30 °C to +80 °C)
Air humidity	5 % to 95 % as defined under IEC 61851-1 Ec3/EN 61851-1 (2017)
Max altitude above sea level	Max 6,500 ft (2,000 m) (air pressure: 860 hPa to 1,060 hPa)
UV protection	Outdoors (F1)
Housing material	Lexan® EXL9330 (copolymer) Flame class rating V0 (UL94)
Protection category (impact strength)	IK10 as defined under IEC 62262:2002
Weight (without eClick)	6.4 kg
Number of charging ports	1
Plug assembly	Type 1 plug as defined under SAE J1772™, plug compartments on eBox, shutter
Cable length	24'-7 1/4" (7.5 m)
Backend protocol	eOperate using LG2WAN for business applications and eHome using OCPP 2.0 for residential application
Input power from eClick	up to 10.4 kW (WYE) / up to 12 kW (split phase / center tap delta) (up to 50 A)
Output power	up to 10.4 kW (WYE) / up to 12 kW (split phase / center tap delta) (up to 50 A)
Electrical Protection Class	I
Standby power	6 W
Charging mode	Mode 3 (IEC 61851)
Vehicle communication	Charging current controlled via PWM pilot signal (IEC 61851-1:2017)
Alternative vehicle communication	ISO 15118 ready via PLC
User protection: integrated	Integrated AC/DC sensitive GFCI, triggering at: 20 mA rms for AC and for DC,
Integrated overvoltage protection	according to UL2231 (ESD/Surge/Burst)
Interaction	LED ring for charging status; 2 status LEDs: authentication / RFID, vehicle link; 1 status LED as touch button: Bluetooth
Measured consumption	Current and voltage measured by eBox, power and energy provided with 99 % accuracy.
Direct communication	Bluetooth Class 1 and 2 (power level)
Backend link	eHome (eCharge+ app): WLAN with 2.4 GHz b/g/n with WPA2 (aerial gain, frequency-dependent, max 4.6 dBi) or LAN or eOperate: SIM-card (frequency- and direction-dependent, max 4.4 dBi aerial gain)
Authentication / activation	Free charging, eCharge+ app (smartphone app for iOS® / Android™ from contracted providers or Direct Payment (credit card / PayPal), Direct Payment via web access
Plug&Charge (ISO 15118)	Yes
RFID authentication	Yes, protocols: MIFARE Classic (card and chip) as defined under ISO 14443A, Type V (ISO/IEC 15693/Vicinity)
Charging port number	Charge port number: lasered on shutter

Remark: Android is a trademark of Google LLC.

EBOX DATA CUT SHEET | SCALE N.T.S. | 21

FOR REFERENCE ONLY, DESIGNED AND PROVIDED BY OTHERS.

eMOBILITY SOLUTIONS

innogy

eBox professional
Data sheet

The eBox professional is a modern, leading-edge charging solution for electric vehicles. It can be used easily and quickly for charging up to 12kW of power. It presents a large number of ports and authentication options. The eBoxes can be mounted in the eClick on a wall. The eBox professional is available with a Type 1 plug and cable.

NOT USED

Key features

- Charging (up to 12 kW)
- Charging status displayed by 3 LEDs and LED ring
- Facilities for authenticating and paying for charging processes by app, RFID card or ISO 15118
- LTE / 3G / 2G communication with eOperate or WLAN, LAN with eCharge+ app
- Commissioning simply clicking the eBox on the eClick and connect via Bluetooth with the smartphone

Certificates

NOT USED | SCALE N.T.S. | 22

NOTE: THE ORIGINAL SIZE OF THIS PLAN IS 24" X 36". SCALE RATIO IS NOT VALID FOR REDUCED OR ENLARGED SHEET SIZES

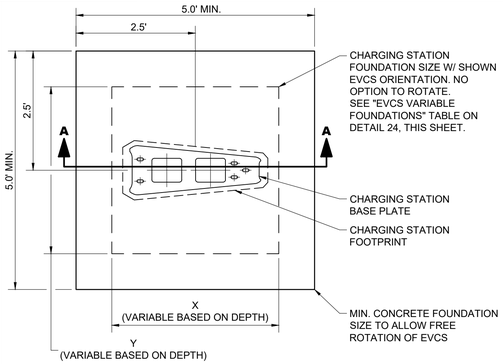

NOTES:
1. CHARGING STATION FOUNDATION TO EXTEND FROM BACK OF CURB TO BACK OF CURB WHEN PLACED IN LANDSCAPE ISLAND.
2. SEE DETAIL #24 - FOR PARKING LOT INSTALLATIONS.
3. SEE DETAIL #27 - FOR PARKING GARAGE INSTALLATIONS.

V4 EVCS FOUNDATION | SCALE N.T.S. | 23

EVCS VARIABLE FOUNDATIONS

DEPTH (D) (FT)	LENGTH (Y) (FT)	WIDTH (X) (FT)
3.00	3.50	3.50
3.50	3.00	4.50
3.50	2.50	6.50

NOTES:
* ASSUMES 1.5 KSF SOIL BEARING PRESSURES.
* ASSUMES 170 MPH WIND SPEEDS PER ASCE 7-10.
* ASSUMES LENGTH (Y) VARIABLE PERPENDICULAR TO EVCS FRONT / BROAD FACE.

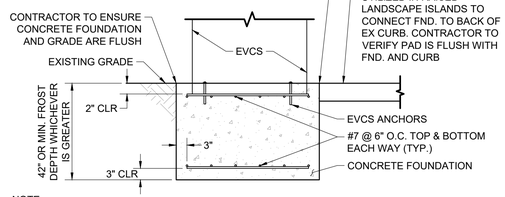

NOTE:
1. EXISTING GRADE AROUND EVCS'S INSTALLED IN ISLANDS CAN BE GRASS OR FILLED WITH REINFORCED CONCRETE AT #4 @ 12" O.C. PROVIDE 1/2" COMPRESSIBLE JOINT FILLER AND POURED SEPARATELY.
2. KHA IS NOT RESPONSIBLE FOR THE DESIGN OF EQUIPMENT OR ANCHORAGE TO THE FOUNDATION. MANUFACTURER SHALL SUBMIT LOADS TO ENGINEER OF RECORD FOR RECORD KEEPING ONLY.

V4 EVCS FOUNDATION SECTION A-A | SCALE N.T.S. | 24

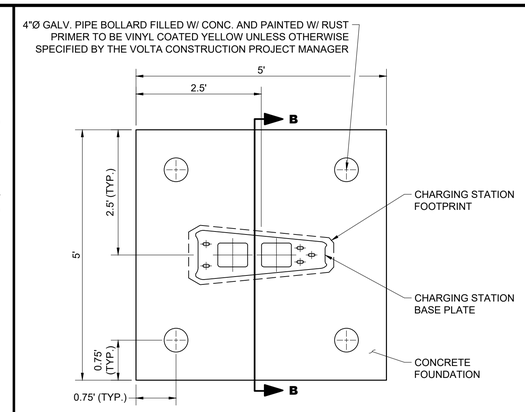

NOTES:
1. SEE DETAIL #26 - FOR PARKING LOT INSTALLATIONS.
2. SEE DETAILS #27, #28, & #29 - FOR PARKING GARAGE INSTALLATIONS.

V4 EVCS FOUNDATION W/ 4" PIPE BOL. | SCALE N.T.S. | 25

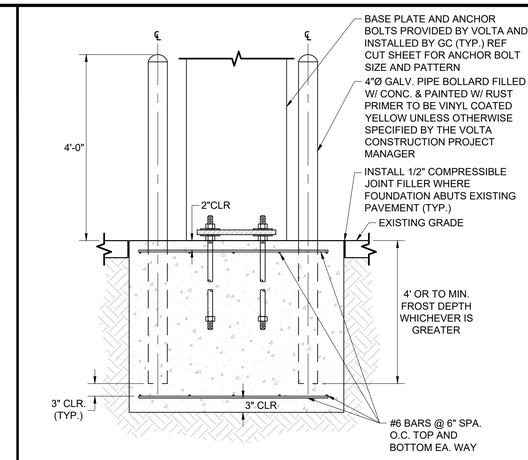

EVCS FOUNDATION SECTION B-B | SCALE N.T.S. | 26

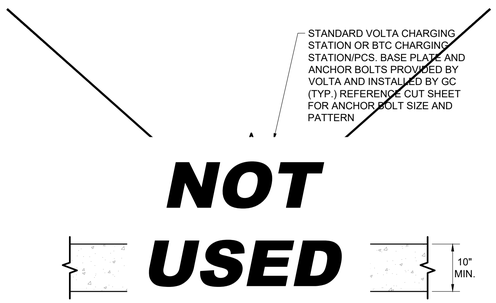

NOTES:
1. CONTRACTOR SHALL TAKE NECESSARY PRECAUTIONS WHEN DRILLING INTO EXISTING CIP SLAB AND CIP DROP PANELS TO AVOID DAMAGE TO ANY REINFORCING AND EXISTING STRUCTURAL COMPONENTS.
2. USE APPROVED ASTM METHOD (X-RAY, PACOMETER, GPR, ETC.) TO LOCATE MILD STEEL AND PRE-STRESSING TENDONS PRIOR TO DRILLING. DO NOT CUT OR DRILL THROUGH ANY EXISTING REINFORCING. ADJUST LOCATION AS NECESSARY TO AVOID EXISTING REINFORCING.
3. REFER TO CIVIL PLANS FOR CHARGER LOCATION.

POST INSTALLED AT ELEVATED SLAB EVCS | SCALE N.T.S. | 27

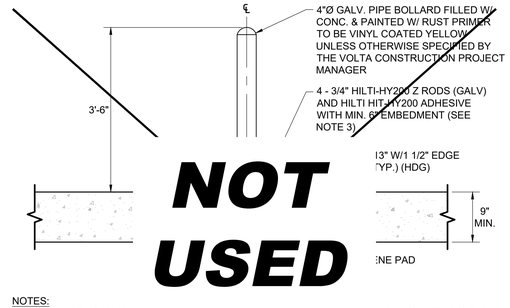

NOTES:
1. CONTRACTOR SHALL TAKE NECESSARY PRECAUTIONS WHEN DRILLING INTO EXISTING CIP SLAB AND CIP DROP PANELS TO AVOID DAMAGE TO ANY REINFORCING AND EXISTING STRUCTURAL COMPONENTS.
2. USE APPROVED ASTM METHOD (X-RAY, PACOMETER, GPR, ETC.) TO LOCATE MILD STEEL AND PRE-STRESSING TENDONS PRIOR TO DRILLING. DO NOT CUT OR DRILL THROUGH ANY EXISTING REINFORCING. ADJUST LOCATION AS NECESSARY TO AVOID EXISTING REINFORCING.
3. PRIOR TO DRILLING, CONTRACTOR SHALL VERIFY THICKNESS OF EXISTING CONCRETE SLAB IS AT LEAST 9" AND THAT 6" ANCHOR EMBEDMENT CAN BE PROVIDED.
4. REFER TO CIVIL PLANS FOR BOLLARD LOCATIONS.
5. CONCRETE TO BE 6,000 PSI.

POST INSTALLED BOLLARD | SCALE N.T.S. | 28

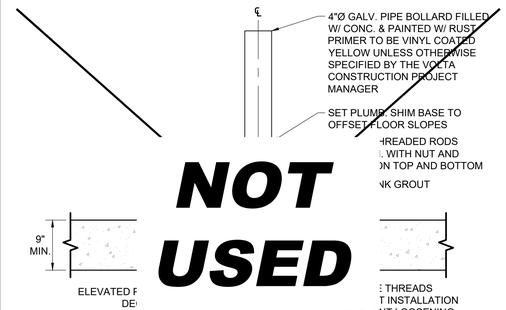

NOTE:
1. CONTRACTOR SHALL TAKE NECESSARY PRECAUTIONS WHEN DRILLING INTO PT SLAB AND BEAMS TO AVOID DAMAGE TO PT STRANDS. IF J-HOOKED ANCHOR BOLTS ARE EMBEDDED OR HAVE RODS THAT ARE EPOXIED INTO SLAB AND/OR CURB FOR CONNECTION THEN BOTTOM PLATES SHOWN ARE NOT USED.
2. IF LOCATIONS ON PLANS CONFLICT WITH DT STEM OR PT BEAMS, CONTRACTOR TO CONFIRM A NEW LOCATION WITH THE EOR.

BOLLARD CONNECTION-SLAB MOUNT | SCALE N.T.S. | 29

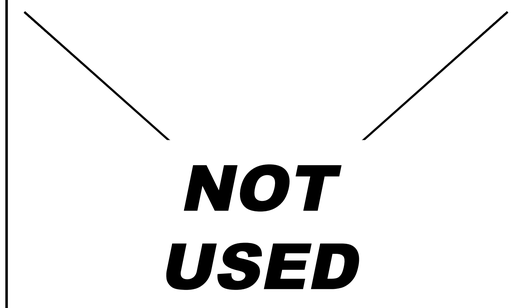

NOT USED | SCALE N.T.S. | 30

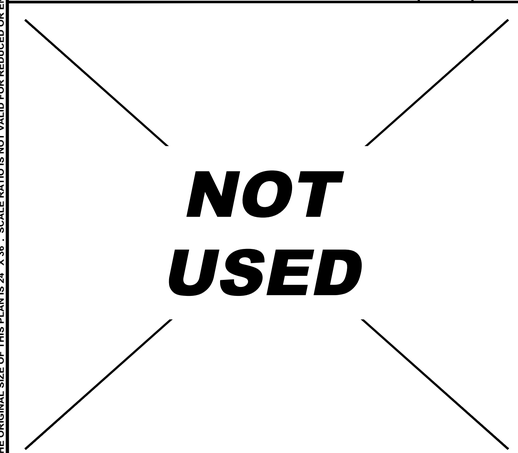

NOT USED | SCALE N.T.S. | 31

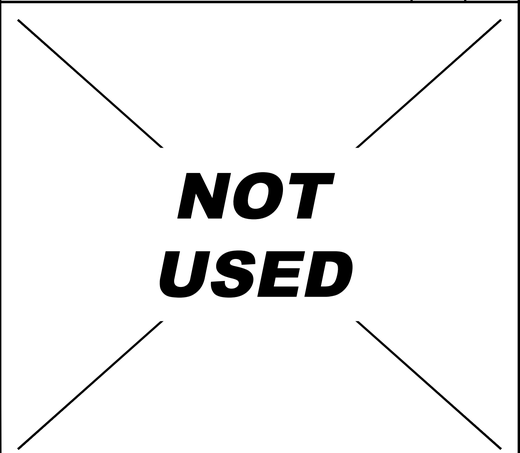

NOT USED | SCALE N.T.S. | 32

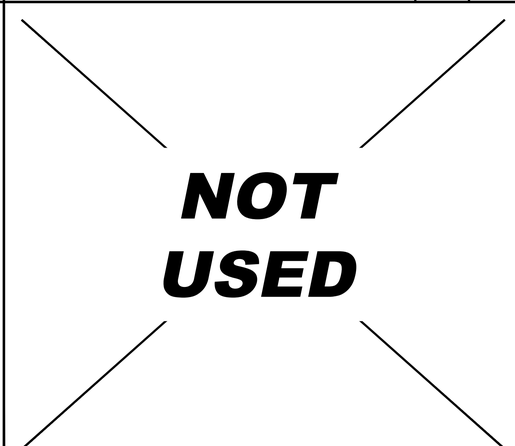

NOT USED | SCALE N.T.S. | 33

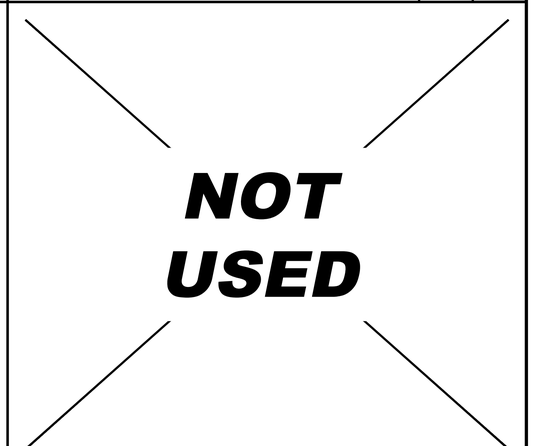

NOT USED | SCALE N.T.S. | 34

NOTE: THE ORIGINAL SIZE OF THIS PLAN IS 24" X 36". SCALE RATIO IS NOT VALID FOR REDUCED OR ENLARGED SHEET SIZES

VOLTA
155 DE HARO STREET
SAN FRANCISCO, CA 94103

Kimley»Horn
1 N LEXINGTON AVE, SUITE 505
WHITE PLAINS, NY 10601
Main: (914) 368-9200 | www.kimley-horn.com

© 2021 Kimley-Horn Engineering and Landscape Architecture of New York, P.C

REV	DATE	DESCRIPTION	BY
1	04/01/2021	CD90s	JC
2	05/12/2021	COMMENTS PER VOLTA	JC
3	06/08/2021	COMMENTS PER VOLTA	LT

ISSUE DATE
06/08/2021

ISSUED FOR
REVIEW

IT IS A VIOLATION OF LAW FOR ANY PERSON, UNLESS THEY ARE ACTING UNDER THE DIRECTION OF A LICENSED PROFESSIONAL ENGINEER, TO ALTER THIS DOCUMENT.

JEFFERSON VALLEY MALL
650 LEE BOULEVARD
YORKTOWN HEIGHTS, NY 10598

SHEET TITLE
SITE DETAILS

SHEET NUMBER
C3-03

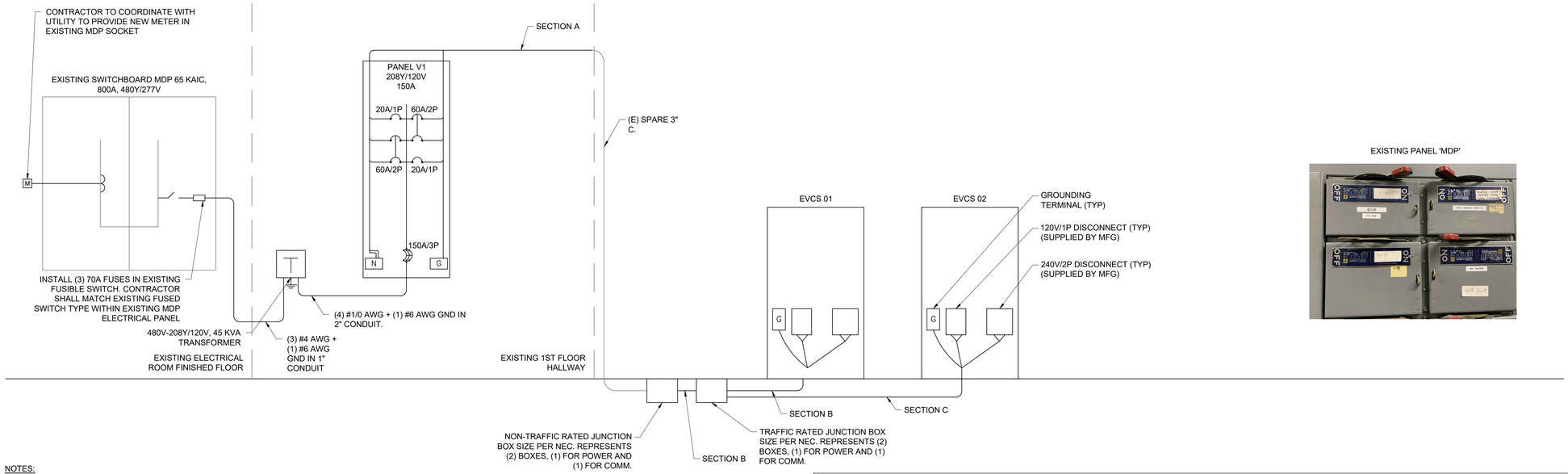

EXISTING PANEL 'MDP'

NOTES:

1. ALL ELECTRICAL WORK AND RELATED ACTIVITIES PERFORMED ON SITE SHALL BE DONE IN ACCORDANCE WITH NATIONAL ELECTRICAL CODE (NEC) STANDARDS BEING ENFORCED BY ALL APPLICABLE JURISDICTIONAL REQUIREMENTS AT THE TIME OF CONSTRUCTION.
2. ANY PAVEMENT DAMAGED DURING CONSTRUCTION SHALL BE REPAIRED OR REPLACED BY THE CONTRACTOR TO PRE-CONSTRUCTION CONDITIONS OR BETTER.
3. CONTRACTOR SHALL USE THWN COPPER CONDUCTORS.
4. CONTRACTOR SHALL USE EMT INSIDE AND OUTSIDE ABOVE GRADE WHERE NOT SUBJECT TO DAMAGE. CONTRACTOR SHALL RGS INSIDE AND OUTSIDE ABOVE GRADE WHERE SUBJECT TO DAMAGE. CONTRACTOR SHALL USE PVC SCHEDULE 80 BELOW GRADE.
5. SEE SHEETS C1-00 AND C2-00 FOR CONDUIT STUB UP LOCATIONS.
6. CONTRACTOR TO LOCATE JUNCTION BOX, LINE BOX (LB), OR APPROVED ALTERNATIVE FOR SITE SPECIFIC RUN LENGTHS AND BENDS.

Panelboard V1 Location: Existing Electrical Room Volts: 208Y/120V Phase: 3 Wire: 4 Hertz: 60
150A MCB Main AIC: N/A Branch AIC: 42K ENCL. (NEMA): 1 MTG: Surface
150 Amp Frame , Ground Bar, Locking Cover, Panel Card.

Description of Load Served	Breaker Amp	Breaker Pole	Wire	A/Phase A	A/Phase B	A/Phase C	CKT No.	CKT No.	A/Phase A	A/Phase B	A/Phase C	Wire	Breaker Amp	Breaker Pole	Description of Load Served
CHARGING STATION EVCS 01	**20**	**1**	**See Note 3**	**5.0**			1	2	**48.0**			**See Note 3**	**60**	**2**	**CHARGING STATION EVCS 02**
CHARGING STATION EVCS 01	**60**	**2**	**See Note 3**		**48.0**		3	4		**48.0**					
						48.0	5	6			**5.0**	**See Note 3**	**20**	**1**	**CHARGING STATION EVCS 02**
SPACE							7	8							SPACE
SPACE							9	10							SPACE
SPACE							11	12							SPACE
SPACE							13	14							SPACE
SPACE							15	16							SPACE
SPACE							17	18							SPACE
SPACE							19	20							SPACE
SPACE							21	22							SPACE
SPACE							23	24							SPACE
SPACE							25	26							SPACE
SPACE							27	28							SPACE
SPACE							29	30							SPACE
	Total A/Phase			5.0	48.0	48.0			48.0	48.0	5.0		Total A/Phase		

Notes:
1. Connected KVA (New): 24.2
2. Demand KVA(New): 30.3
3. See 48A Voltage Drop Table for conductor sizing.

48A Charger L2 Conductor Voltage Drop Table Per Charging Station

<175FT	175FT-200FT	200FT-255FT	255FT-275FT	275FT-320FT	320FT-400FT	400FT-440FT	440FT-510FT	510FT-635FT	635FT-700FT	700FT-800FT
(2) #4 AWG + (2) #12 AWG + (1) #6 AWG GND	(2) #4 AWG + (2) #10 AWG + (1) #6 AWG GND	(2) #3 AWG + (2) #10 AWG + (1) #4 AWG GND	(2) #2 AWG + (2) #10 AWG + (1) #4 AWG GND	(2) #2 AWG + (2) #8 AWG + (1) #4 AWG GND	(2) #1 AWG + (2) #8 AWG + (1) #4 AWG GND	(2) #1/0 AWG + (2) #8 AWG + (1) #3 AWG GND	(2) #1/0 AWG + (2) #6 AWG + (1) #3 AWG GND	(2) #2/0 AWG + (2) #6 AWG + (1) #2 AWG GND	(2) #3/0 AWG + (2) #6 AWG + (1) #1 AWG GND	(2) #3/0 AWG + (2) #4 AWG + (1) #1 AWG GND

VOLTAGE DROP TABLE NOTES
1. CONTRACTOR SHALL BE RESPONSIBLE FOR DE-RATING CONDUCTORS WHEN 4 OR MORE CURRENT CARRYING CONDUCTORS ARE CARRIED IN THE SAME CONDUIT PER THE NEC.
2. THE DISTANCES IN THIS TABLE ARE TOTAL DISTANCES, NOT HORIZONTAL DISTANCES. INCLUDE VERTICAL RUNS AND JUNCTION BOX COIL LENGTH IN THE TOTAL CONDUCTOR DISTANCE.
3. WHEN MORE THAN ONE CHARGING STATION CIRCUIT CONDUCTORS ARE IN A CONDUIT, USE ONLY ONE SHARED EQUIPMENT GROUND CONDUCTOR.
4. WHEN THERE IS A REMOTE HOLSTER, INSTALL (2) #6 AWG + (1) #8 AWG GND + (1) #14 AWG COMM IN THE CONDUIT FROM EVCS TO REMOTE HOLSTER.
5. WHEN INSTALLING #1/0 AWG OR LARGER CONDUCTORS FROM THE POWER SOURCE TO EVCS, INCLUDE MULTICONDUCTOR TAPS IN THE CLOSEST JUNCTION BOX PRIOR TO ENTERING THE EVCS OR IN THE EVCS ITSELF SO THAT #6 AWG CONDUCTORS CAN BE TERMINATED IN THE EVCS.

Conduit Schedule

Conduit Section	Conduit #	Conduit Size	Conductors	Installation Method
A	1	2"	(See Voltage Drop Table)	Interior Ceiling Mount / Interior Surface Mount
EX	1	3"	(See Voltage Drop Table)	Existing Conduit
B	1	2"	(See Voltage Drop Table)	Directional Bore
C	1	2"	(See Voltage Drop Table)	Directional Bore

NOTE: THE ORIGINAL SIZE OF THIS PLAN IS 24" X 36". SCALE RATIO IS NOT VALID FOR REDUCED OR ENLARGED SHEET SIZES

VOLTA
155 DE HARO STREET
SAN FRANCISCO, CA 94103

Kimley»Horn
1 N LEXINGTON AVE, SUITE 505
WHITE PLAINS, NY 10601
Main: (914) 368-9200 | www.kimley-horn.com

© 2021 Kimley-Horn Engineering and Landscape Architecture of New York, P.C

REV	DATE	DESCRIPTION	BY
1	04/01/2021	CD90s	JC
2	05/12/2021	COMMENTS PER VOLTA	JC
3	06/08/2021	COMMENTS PER VOLTA	LT

ISSUE DATE
06/08/2021

ISSUED FOR
REVIEW

IT IS A VIOLATION OF LAW FOR ANY PERSON, UNLESS THEY ARE ACTING UNDER THE DIRECTION OF A LICENSED PROFESSIONAL ENGINEER, TO ALTER THIS DOCUMENT.

JEFFERSON VALLEY MALL

650 LEE BOULEVARD YORKTOWN HEIGHTS, NY 10598

SHEET TITLE
ELECTRICAL ONE LINE DIAGRAM & PANEL SCHEDULE

SHEET NUMBER
E1-00

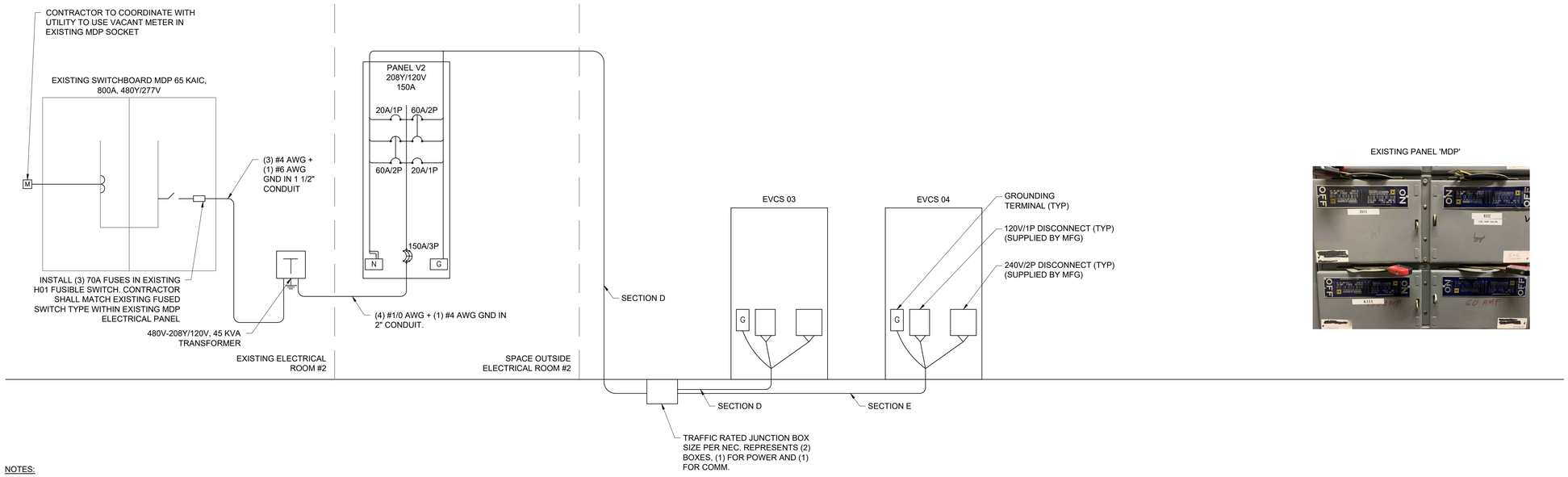

EXISTING PANEL 'MDP'

NOTES:

1. ALL ELECTRICAL WORK AND RELATED ACTIVITIES PERFORMED ON SITE SHALL BE DONE IN ACCORDANCE WITH NATIONAL ELECTRICAL CODE (NEC) STANDARDS BEING ENFORCED BY ALL APPLICABLE JURISDICTIONAL REQUIREMENTS AT THE TIME OF CONSTRUCTION.
2. ANY PAVEMENT DAMAGED DURING CONSTRUCTION SHALL BE REPAIRED OR REPLACED BY THE CONTRACTOR TO PRE-CONSTRUCTION CONDITIONS OR BETTER.
3. CONTRACTOR SHALL USE THWN COPPER CONDUCTORS.
4. CONTRACTOR SHALL USE EMT INSIDE AND OUTSIDE ABOVE GRADE WHERE NOT SUBJECT TO DAMAGE. CONTRACTOR SHALL RGS INSIDE AND OUTSIDE ABOVE GRADE WHERE SUBJECT TO DAMAGE. CONTRACTOR SHALL USE PVC SCHEDULE 80 BELOW GRADE.
5. SEE SHEETS C1-00 AND C2-00 FOR CONDUIT STUB UP LOCATIONS.
6. CONTRACTOR TO LOCATE JUNCTION BOX, LINE BOX (LB), OR APPROVED ALTERNATIVE FOR SITE SPECIFIC RUN LENGTHS AND BENDS.

Panel Schedule

Panelboard V2 Location: Existing Electrical Room Volts: 208Y/120V Phase: 3 Wire: 4 Hertz: 60

150A MCB Main AIC: N/A Branch AIC: 42K ENCL. (NEMA): 1 MTG: Surface

150 Amp Frame , Ground Bar, Locking Cover, Panel Card.

Description of Load Served	Breaker Amp	Breaker Pole	Wire	A/Phase A	A/Phase B	A/Phase C	CKT No.	CKT No.	A/Phase A	A/Phase B	A/Phase C	Wire	Breaker Amp	Breaker Pole	Description of Load Served
CHARGING STATION EVCS 03	**20**	**1**	**See Note 3**	**5.0**			1	2	**48.0**			**See Note 3**	**60**	**2**	**CHARGING STATION EVCS 04**
CHARGING STATION EVCS 03	**60**	**2**	**See Note 4**		**48.0**		3	4		**48.0**					
						48.0	5	6			**5.0**	**See Note 3**	**20**	**1**	**CHARGING STATION EVCS 04**
SPACE							7	8							SPACE
SPACE							9	10							SPACE
SPACE							11	12							SPACE
SPACE							13	14							SPACE
SPACE							15	16							SPACE
SPACE							17	18							SPACE
SPACE							19	20							SPACE
SPACE							21	22							SPACE
SPACE							23	24							SPACE
SPACE							25	26							SPACE
SPACE							27	28							SPACE
SPACE							29	30							SPACE
	Total A/Phase			5.0	48.0	48.0			48.0	48.0	5.0		Total A/Phase		

Notes:
1. Connected KVA (New): 24.2
2. Demand KVA(New): 30.3
3. See 40A Voltage Drop Table for conductor sizing.
4. See 48A Voltage Drop Table for conductor sizing.

48A Charger L2 Conductor Voltage Drop Table Per Charging Station

<175FT	175FT-200FT	200FT-255FT	255FT-275FT	275FT-320FT	320FT-400FT	400FT-440FT	440FT-510FT	510FT-635FT	635FT-700FT	700FT-800FT
(2) #4 AWG + (2) #12 AWG + (1) #6 AWG GND	(2) #4 AWG + (2) #10 AWG + (1) #6 AWG GND	(2) #3 AWG + (2) #10 AWG + (1) #4 AWG GND	(2) #2 AWG + (2) #10 AWG + (1) #4 AWG GND	(2) #2 AWG + (2) #8 AWG + (1) #4 AWG GND	(2) #1 AWG + (2) #8 AWG + (1) #4 AWG GND	(2) #1/0 AWG + (2) #8 AWG + (1) #3 AWG GND	(2) #1/0 AWG + (2) #6 AWG + (1) #3 AWG GND	(2) #2/0 AWG + (2) #6 AWG + (1) #2 AWG GND	(2) #3/0 AWG + (2) #6 AWG + (1) #1 AWG GND	(2) #3/0 AWG + (2) #4 AWG + (1) #1 AWG GND

VOLTAGE DROP TABLE NOTES

1. CONTRACTOR SHALL BE RESPONSIBLE FOR DE-RATING CONDUCTORS WHEN 4 OR MORE CURRENT CARRYING CONDUCTORS ARE CARRIED IN THE SAME CONDUIT PER THE NEC.
2. THE DISTANCES IN THIS TABLE ARE TOTAL DISTANCES, NOT HORIZONTAL DISTANCES. INCLUDE VERTICAL RUNS AND JUNCTION BOX COIL LENGTH IN THE TOTAL CONDUCTOR DISTANCE.
3. WHEN MORE THAN ONE CHARGING STATION CIRCUIT CONDUCTORS ARE IN A CONDUIT, USE ONLY ONE SHARED EQUIPMENT GROUND CONDUCTOR.
4. WHEN THERE IS A REMOTE HOLSTER, INSTALL (2) #6 AWG + (1) #8 AWG GND + (1) #14 AWG COMM IN THE CONDUIT FROM EVCS TO REMOTE HOLSTER.
5. WHEN INSTALLING #1/0 AWG OR LARGER CONDUCTORS FROM THE POWER SOURCE TO EVCS, INCLUDE MULTICONDUCTOR TAPS IN THE CLOSEST JUNCTION BOX PRIOR TO ENTERING THE EVCS OR IN THE EVCS ITSELF SO THAT #6 AWG CONDUCTORS CAN BE TERMINATED IN THE EVCS.

Conduit Schedule

Conduit Section	Conduit #	Conduit Size	Conductors	Installation Method
D	1	2"	(See Voltage Drop Table)	Surface Mount / Directional Bore
	2	3/4" Min	Future Communications w/ Pull String	
E	1	1 1/2"	(See Voltage Drop Table)	Hand Trench
	2	3/4" Min	Future Communications w/ Pull String	

NOTE: THE ORIGINAL SIZE OF THIS PLAN IS 24" X 36". SCALE RATIO IS NOT VALID FOR REDUCED OR ENLARGED SHEET SIZES

VOLTA
155 DE HARO STREET
SAN FRANCISCO, CA 94103

Kimley»Horn
1 N LEXINGTON AVE, SUITE 505
WHITE PLAINS, NY 10601
Main: (914) 368-9200 | www.kimley-horn.com
© 2021 Kimley-Horn Engineering and Landscape Architecture of New York, P.C

REV	DATE	DESCRIPTION	BY
1	04/01/2021	CD90s	JC
2	05/12/2021	COMMENTS PER VOLTA	JC
3	06/08/2021	COMMENTS PER VOLTA	LT

ISSUE DATE
06/08/2021

ISSUED FOR
REVIEW

IT IS A VIOLATION OF LAW FOR ANY PERSON, UNLESS THEY ARE ACTING UNDER THE DIRECTION OF A LICENSED PROFESSIONAL ENGINEER, TO ALTER THIS DOCUMENT.

JEFFERSON VALLEY MALL

650 LEE BOULEVARD YORKTOWN HEIGHTS, NY 10598

SHEET TITLE
ELECTRICAL ONE LINE DIAGRAM & PANEL SCHEDULE

SHEET NUMBER
E1-01

NOTES:
1. A NATIONALLY RECOGNIZED TESTING LABORATORY SHALL LIST ALL EQUIPMENT IN COMPLIANCE WITH ART110.3.
2. ALL EXTERIOR EQUIPMENT SHALL BE RAIN TIGHT AND APPROVED FOR USE IN WET CONDITIONS.
3. ALL CONDUCTORS SHALL BE PROVIDED WITH STRAIN RELIEF UPON ENTRY INTO ENCLOSURES.
4. EACH UNGROUNDED CONDUCTOR SHALL BE IDENTIFIED BY PHASE AND SYSTEM PER ART 210.5.
5. ALL METALLIC COMPONENTS SHALL BE GROUNDED VIA EQUIPMENT GROUNDING CONDUCTORS.
6. CHARGING UNITS ARE EQUIPPED WITH AN INTEGRATED CONTRACTOR TO PREVENT BACK FEEDING OF POWER TO THE SOURCE.
7. CONTRACTOR TO FIELD VERIFY MAIN FEED BREAKER SUPPORTING DISTRIBUTION PANEL IS APPROPRIATELY SIZED TO SUPPORT THE LOAD. CONTRACTOR SHALL CONTACT THE ENGINEERING TEAM IMMEDIATELY IF BREAKER IS FOUND TO BE INSUFFICIENT.
8. CONTRACTOR SHALL INSPECT ALL PRE-WIRED CONNECTIONS WITHIN EACH CHARGING STATION TO ENSURE THE CONNECTIONS ARE SOLID. INFORM VOLTA OR THE ENGINEER IF ANY CONNECTIONS ARE LOOSE OR DAMAGED.
9. CONTRACTOR SHALL ENSURE THERE ARE NO EXPOSED CONDUITS.

ABBREVIATIONS:

A	AMPERE
AC	ALTERNATING CURRENT
AL	ALUMINUM
ART	ARTICLE
AUX	AUXILIARY
BLDG	BUILDING STRUCTURE
CONC	CONCRETE
CU	COPPER
DC	DIRECT CURRENT
EGC	EQUIPMENT GROUNDING CONDUCTOR
(E)	EXISTING
EMT	ELECTRIC METALLIC TUBING
EV	ELECTRIC VEHICLE
EVSE	ELECTRIC VEHICLE SUPPLY EQUIPMENT
GALV	GALVANIZED
GND	GROUND
HDG	HOT DIPPED GALVANIZED
I	CURRENT
KVA	KILOVOLT AMPERE
KW	KILOWATT
M	METER
MAX	MAXIMUM
MIN	MINIMUM
N	NEUTRAL
NEC	NATIONAL ELECTRIC CODE
NTS	NOT TO SCALE
(N)	NEW
OC	ON CENTER
PL	PROPERTY LINE
PVC	POLYVINYL CHLORIDE
RMC	RIGID METALLIC CONDUIT
SCH	SCHEDULE
SS	STAINLESS STEEL
TYP	TYPICAL
V	VOLT
W	WATT
XFMR	TRANSFORMER

ELECTRICAL NOTES:
1. ALL ELECTRICAL WORK AND RELATED ACTIVITIES PERFORMED ON-SITE SHALL BE DONE IN ACCORDANCE WITH NATIONAL ELECTRIC CODE (NEC) STANDARDS BEING ENFORCED BY ALL APPLICABLE JURISDICTIONAL REQUIREMENTS AT THE TIME OF CONSTRUCTION.
2. UTILITY EQUIPMENT INSTALLATIONS AND PREP WORK SHALL BE COORDINATED WITH THE APPROPRIATE UTILITY ENGINEER AT TIME OF PRECONSTRUCTION MEETING TO ENSURE ACCURACY OF INSTALLATIONS.
3. CONDUIT PATHS ARE REPRESENTATIVE ONLY. EXACT CONDUIT PLACEMENT TO BE DETERMINED ON SITE BASED ON FIELD CONDITIONS.
4. CONTRACTOR SHALL TAKE NECESSARY PRECAUTIONS WHEN DRILLING INTO EXISTING CIP SLAB AND CIP DROP PANELS TO AVOID DAMAGE TO ANY REINFORCING AND EXISTING STRUCTURAL COMPONENTS.
5. USE APPROVED ASTM METHOD (X-RAY, PACOMETER, GPR, ETC.) TO LOCATE MILD STEEL AND PRE-STRESSING TENDONS PRIOR TO DRILLING. DO NOT CUT OR DRILL THROUGH ANY EXISTING REINFORCING. ADJUST LOCATION AS NECESSARY TO AVOID EXISTING REINFORCING.
6. PRIOR TO DRILLING, CONTRACTOR SHALL VERIFY THICKNESS OF EXISTING CONCRETE WALL IS AT LEAST 9" AND THAT 6" ANCHOR EMBEDMENT CAN BE PROVIDED.
7. REFER TO CIVIL PLANS FOR WALL MOUNT LOCATIONS.

ELECTRICAL NOTES & ABBREVIATIONS | 1

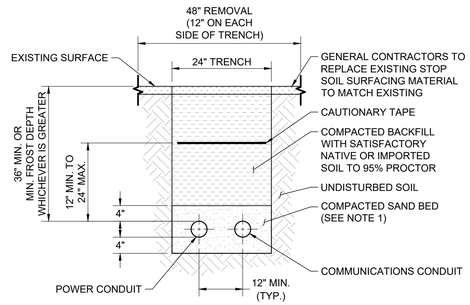

NOTES:
1. LEAN CONCRETE RED-COLORED TOP, MAY BE USED IN PLACE OF COMPACTED SAND.
2. BURY CONDUITS 36" MINIMUM BELOW FINISHED GRADE.
3. ALL PVC SWEEPS TO BE A MINIMUM 36" SWEEPS.
4. CONDUIT SIZES PER CONDUIT SCHEDULE.

POWER TRENCH | SCALE N.T.S. | 2

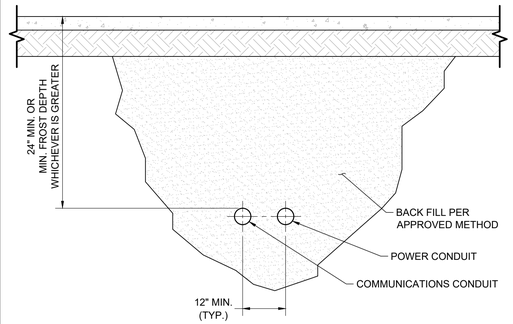

NOTE:
1. EXACT CONDUIT DIAMETERS MAY VARY UPON INSTALLATION. REFERENCE CONDUIT SIZE PER THE CONDUIT SCHEDULE.

BORE SECTION | SCALE N.T.S. | 3

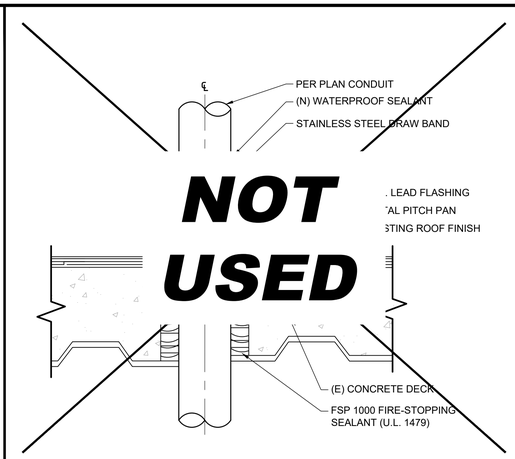

CORE DETAIL | SCALE N.T.S. | 4

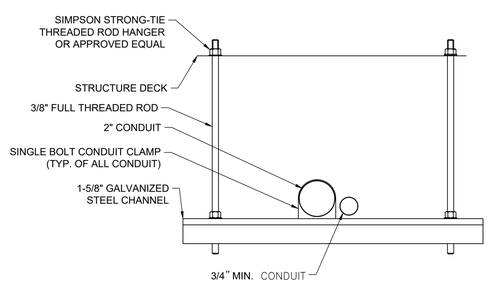

CEILING CONDUIT SUPPORT | SCALE N.T.S. | 5

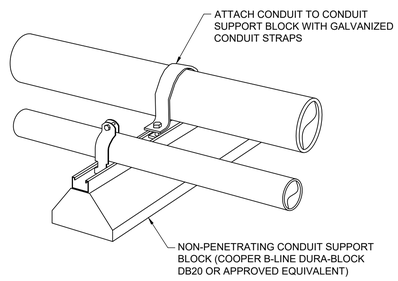

ROOFTOP CONDUIT SUPPORT | SCALE N.T.S. | 6

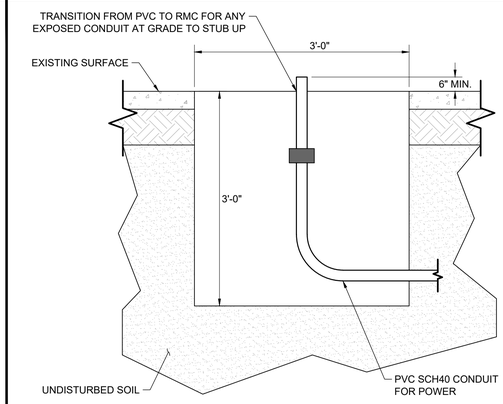

NOTE:
1. EXACT CONDUIT DIAMETERS MAY VARY UPON INSTALLATION. REFERENCE CONDUIT SIZE PER THE CONDUIT SCHEDULE.

BORE PIT | SCALE N.T.S. | 7

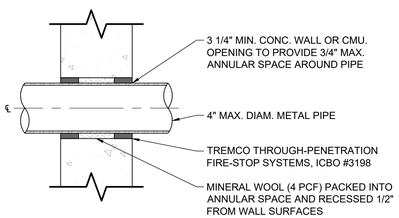

CONCRETE WALL PENETRATION

NOTES:
1. CONTRACTOR SHALL TAKE NECESSARY PRECAUTIONS WHEN DRILLING INTO EXISTING CIP SLAB AND CIP DROP PANELS TO AVOID DAMAGE TO ANY REINFORCING AND EXISTING STRUCTURAL COMPONENTS.
2. USE APPROVED ASTM METHOD (X-RAY, PACOMETER, GPR, ECT.) TO LOCATED MILD STEEL AND PRE-STRESSING TENDONS PRIOR TO DRILLING. DO NOT CUT OR DRILL THROUGH ANY EXISTING REINFORCING. ADJUST LOCATION AS NECESSARY TO AVOID EXISTING REINFORCING.
3. ALL PENETRATIONS MUST BE LOCATED A MINIMUM OF 18" AWAY FROM THE EDGE OF CONCRETE. CONTACT EOR IF VARIANCE IS REQUESTED.
4. PENETRATIONS THROUGH WALLS AND FLOORS SHALL COMPLY WITH THE LOCAL AHJ LATEST BUILDING CODE CHAPTER 7 FIRE AND SMOKE PROTECTION FEATURES SECTIONS 709.6 AND 714.

PENETRATION DETAIL | SCALE N.T.S. | 8

WALL CONDUIT MOUNT STRAP | SCALE N.T.S. | 9

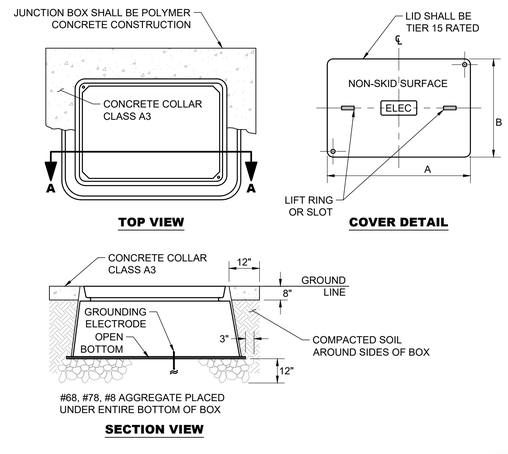

NON-TRAFFIC RATED JUNCTION BOX | SCALE N.T.S. | 10

BTC POLE DISCONNECT SWITCH | SCALE N.T.S. | 11

NOTE: THE ORIGINAL SIZE OF THIS PLAN IS 24" X 36". SCALE RATIO IS NOT VALID FOR REDUCED OR ENLARGED SHEET SIZES

VOLTA
155 DE HARO STREET
SAN FRANCISCO, CA 94103

Kimley»Horn
1 N LEXINGTON AVE, SUITE 505
WHITE PLAINS, NY 10601
Main: (914) 368-9200 | www.kimley-horn.com

© 2021 Kimley-Horn Engineering and Landscape Architecture of New York, P.C

REV	DATE	DESCRIPTION	BY
1	04/01/2021	CD90s	JC
2	05/12/2021	COMMENTS PER VOLTA	JC
3	06/08/2021	COMMENTS PER VOLTA	LT

ISSUE DATE
06/08/2021

ISSUED FOR
REVIEW

IT IS A VIOLATION OF LAW FOR ANY PERSON, UNLESS THEY ARE ACTING UNDER THE DIRECTION OF A LICENSED PROFESSIONAL ENGINEER, TO ALTER THIS DOCUMENT.

JEFFERSON VALLEY MALL
650 LEE BOULEVARD
YORKTOWN HEIGHTS, NY 10598

SHEET TITLE
ELECTRICAL NOTES & DETAILS

SHEET NUMBER
E2-00

IBM BESS and EV Charging Stations

PowerFlex Solar, LLC
805 3rd Avenue
New York, NY 10022
www.powerflex.com

RECEIVED
PLANNING DEPARTMENT
AUG 31 2022
TOWN OF YORKTOWN

IBM is constructing a solar carport at its Watson Research Center in Yorktown and has recently received an incentive award from Con Edison to install EV car charging stations for its employees and visitors at the same location. IBM currently has six (6) existing EV charging stations operating at Watson and is now looking to expand and upgrade that system to a total of eighty-five (85) chargers. The expanded EV system will be incorporated into the carport structure and will be contained entirely within the footprint of the solar carport. However, the EV system will be electrically distinct from the PV system and should not be confused with the PV system or its Battery Energy Storage System (BESS) (IBM is also seeking permission to add a battery system to the PV carport system, but that permit application should not be confused with or delay the EV charger permit application). The add-on project will consist of a 1 MWac storage system.

IBM will own the EV system directly and has committed funds from its 2022 capital budget towards the purchase of the EV system. It is imperative that these funds be utilized during the 2022 budget year, or the funds may not remain available for the proposed EV project in the coming year. IBM has already spent funds towards the engineering and permitting of the EV project, but it is necessary that the project receive Town Planning Board approval before IBM can commit further funds towards the purchase of the EV equipment. We will, of course, secure all necessary building and electrical permits in due course once the project has received Board approval, but the window for the project to commence construction this year is rapidly narrowing. Thus, anything that can be done to expedite Board approval for the EV project would be greatly appreciated.

TOWN OF YORKTOWN
PLANNING BOARD

RECEIVED
PLANNING DEPARTMENT
AUG 31 2022
TOWN OF YORKTOWN

Yorktown Community and Cultural Center, 1974 Commerce Street, Yorktown Heights, New York 10598, Phone (914) 962-6565, Fax (914) 962-3986

SPECIAL USE PERMIT APPLICATION

If this application is not being made in conjunction with a request for site plan approval from the Planning Board, a site plan/plot plan and Short EAF must also be submitted with this application. The required fee is $625.00 for new applications and $312.00 for requests to renew an existing permit.

Date 8/31/22

1. Tax Map Designation (Section, Block, Lot) 69.16-1-1

2. Property Address 1101 Kitchawan Road, Yorktown Heights, NY 10598

3. Zone: OB (Research Laboratory and Office) **Total Acreage:** 187.35 Ac

4. Indicate requested special use permit:

- ☐ §300-21(8)(a)[1] Outdoor service in commercial districts.
- ☐ §300-40 Bus passenger shelters.
- ☐ §300-54 Religious institutions, social, cultural, charitable and recreational nonprofit uses.
- ☐ §300-55 Parochial, private elementary and high schools, colleges and seminaries.
- ☐ §300-69 Valet parking at banquet halls.
- ☐ §300-71 New and/or used car automobile sales.
- ☐ §300-73.1(A)(2) Permanent seasonal outdoor sales in commercial districts.
- ☐ §300-75 Warehouse or storage in retail shopping centers.
- ☐ §300-78 Cemeteries.
- ☐ §300-79 Self-storage centers.
- ☐ §300-80 Sidewalk cafes. (outdoor dining for more than 12 seats)
- ☐ §300-81.1 Helistops.
- ☐ §300-81.2 Accessory recycling facilities.
- ☐ §300-81.4 Large-Scale Solar Power Generation Systems and Facilities
- ☑ §300-81.5 Tier 2 Battery Energy Storage Systems
- ☐ §300-238.1 Multifamily dwelling units in the Country Commercial Zone.

5. Description of proposed use (if applying for outdoor dining, indicate proposed dining area square footage and number of seats):

This is an add-on project to our ongoing solar-canopy project at the IBM Watson Research Center. The add-on portion of the project consists of a 1 MW AC Battery Energy Storage System (BESS), as well as the installation of electric vehicle charging stations that will be integrated with the solar canopies.

6. **Applicant**

Name	Michael Landler (Permitting Associate)
Firm	Powerflex
Address	805 Third Avenue, 20th Floor, New York, NY 10022
Phone	(646) 502-6392
Email	michael.landler@powerflex.com

7. **Owner of Record**

Name	John V. Ventresca (GRE US Engineering Operations Manager)
Firm	IBM
Address	1101 Kitchawan Road, Yorktown Heights, NY 10598
Phone	(914) 945-2147
Email	jvventre@us.ibm.com

In the event the permit is issued, the undersigned applicant will comply with all provisions of the Code of the Town of Yorktown and all other applicable laws, codes, rules and regularions of any Federal, State or County Government, bureau or department thereof, having jurisdiction over said premises and the use to be conducted thereat.

Applicant	**Owner of Record**
Michael Landler	J.V.V.
SIGNATURE	SIGNATURE
Michael Landler	John V. Ventresca
PRINT NAME	PRINT NAME
8/2/22	8/5/22
DATE	DATE

Note: By signing this document the owner of the subject property grants permission for Town Officials to enter the property for the purpose of reviewing this application.

F:\Office\WordPerfect\Application Forms\APP SpecialPermit.wpd
This form last updated: September 2020

TOWN OF YORKTOWN PLANNING BOARD

Tier 2 Battery Energy Storage Systems Special Permit Application Addendum

RECEIVED
PLANNING DEPARTMENT
AUG 31 2022
TOWN OF YORKTOWN

GENERAL PROJECT INFORMATION

Project Name: IBM-Watson Research BESS+EVSE Project

Section, Block, Lot: 69.16-1-1

Existing Site Use: ☐ Residential ☑ Commercial Zone: OB (Research Laboratory and Office)

PROVIDE THE TOTAL SYSTEM CAPACITY RATING

Total System Capacity Rating: 4 MWh ~~kWh~~ Power Rating 1 MW (Select One) ☑ AC or ☐ DC

SELECT SYSTEM CONFIGURATION

☑ AC Coupled ☐ DC Coupled ☐ Standalone

SELECT BATTERY TYPE

☑ Lithium-ion, all types ☐ Lead-acid, all types ☐ Nickel-cadmium (Ni-Cd) ☐ Flow batteries

☐ Other: _____

SELECT INSTALLATION TYPE

☐ Indoor ☑ Outdoor

☐ Attached/Detached/Open Garage ☐ Rooftop ☐ Dedicated Use Building

PROPOSED BATTERY ENERGY STORAGE SYSTEM INSTALLATION CONTRACTOR INFORMATION

Contractor

Contact Name: Michael Landler (Permitting Associate)

Business Name: Powerflex

Address: 805 Third Avenue, 20th Floor, New York, NY 10022

Phone: (646) 502-6392

Email: michael.landler@powerflex.com

License #(s): _____

Electrician

Contact Name	Ben Ahles
Business Name	Pure Power Engineering
Address	111 River Street, Suite 1110, Hoboken, NJ 07030
Phone	(201) 687-9975
Email	bahles@purepower.com
License #(s)	

PROPOSED OWNER AND/OR OPERATOR

Name	John V. Ventresca (GRE US Engineering Operations Manager)
Firm	IBM
Address	1101 Kitchawan Road, Yorktown Heights, NY 10598
Phone	(914) 945-2147
Email	jvventre@us.ibm.com

SUBMITTAL REQUIREMENTS

In order to submit a complete permit application for a new battery energy storage system, the applicant must include:

a) Completed Planning Board Special Use Permit Application with this Tier 2 Battery Energy Storage System Addendum.

b) A special permit application fee of $625.00 paid by check made payable to the Town of Yorktown.

c) All site plan application requirements pursuant to Section 300-85.1(I) of the Town of Yorktown Town Code.

Short Environmental Assessment Form
Part 1 - Project Information

RECEIVED
PLANNING DEPARTMENT
AUG 31 2022
TOWN OF YORKTOWN

Instructions for Completing

Part 1 - Project Information. The applicant or project sponsor is responsible for the completion of Part 1. Responses become part of the application for approval or funding, are subject to public review, and may be subject to further verification. Complete Part 1 based on information currently available. If additional research or investigation would be needed to fully respond to any item, please answer as thoroughly as possible based on current information.

Complete all items in Part 1. You may also provide any additional information which you believe will be needed by or useful to the lead agency; attach additional pages as necessary to supplement any item.

Part 1 - Project and Sponsor Information

Name of Action or Project:
IBM-Watson Research BESS+EVSE Project

Project Location (describe, and attach a location map):
1101 Kitchawan Road, Yorktown Heights, NY

Brief Description of Proposed Action:
This project is an add-on project to our ongoing solar-canopy project at the IBM Watson Research Center. The add-on portion of the project consists of a 1 MW AC Battery Energy Storage System (BESS), as well as the installation of electric vehicle charging stations that will be integrated with the solar canopies.

Name of Applicant or Sponsor:	Telephone: (646) 502-6392
Powerflex (Michael Landler, Permitting Associate)	E-Mail: michael.landler@powerflex.com

Address:
805 Third Avenue, 20th Floor

City/PO:	State:	Zip Code:
New York	NY	10022

	NO	YES
1. Does the proposed action only involve the legislative adoption of a plan, local law, ordinance, administrative rule, or regulation? If Yes, attach a narrative description of the intent of the proposed action and the environmental resources that may be affected in the municipality and proceed to Part 2. If no, continue to question 2.	☑	☐
2. Does the proposed action require a permit, approval or funding from any other governmental Agency? If Yes, list agency(s) name and permit or approval:	☑	☐

3.a. Total acreage of the site of the proposed action? 187.35 acres
b. Total acreage to be physically disturbed? < 1 acres
c. Total acreage (project site and any contiguous properties) owned or controlled by the applicant or project sponsor? 187.35 acres

4. Check all land uses that occur on, adjoining and near the proposed action.
☐ Urban ☐ Rural (non-agriculture) ☐ Industrial ☐ Commercial ☑ Residential (suburban)
☑ Forest ☐ Agriculture ☐ Aquatic ☑ Other (specify): Office/Research Park
☐ Parkland

	NO	YES	N/A
5. Is the proposed action,			
a. A permitted use under the zoning regulations?	☐	☑	☐
b. Consistent with the adopted comprehensive plan?	☐	☑	☐

	NO	YES
6. Is the proposed action consistent with the predominant character of the existing built or natural landscape?	☐	☑
7. Is the site of the proposed action located in, or does it adjoin, a state listed Critical Environmental Area? If Yes, identify: _____	☑	☐
8. a. Will the proposed action result in a substantial increase in traffic above present levels?	☑	☐
b. Are public transportation service(s) available at or near the site of the proposed action?	☐	☑
c. Are any pedestrian accommodations or bicycle routes available on or near site of the proposed action?	☐	☑
9. Does the proposed action meet or exceed the state energy code requirements? If the proposed action will exceed requirements, describe design features and technologies: _____	☐	☑
10. Will the proposed action connect to an existing public/private water supply? If No, describe method for providing potable water: _____	☑	☐
11. Will the proposed action connect to existing wastewater utilities? If No, describe method for providing wastewater treatment: _____	☑	☐
12. a. Does the site contain a structure that is listed on either the State or National Register of Historic Places?	☑	☐
b. Is the proposed action located in an archeological sensitive area?	☑	☐
13. a. Does any portion of the site of the proposed action, or lands adjoining the proposed action, contain wetlands or other waterbodies regulated by a federal, state or local agency?	☑	☐
b. Would the proposed action physically alter, or encroach into, any existing wetland or waterbody? If Yes, identify the wetland or waterbody and extent of alterations in square feet or acres: _____	☑	☐

14. Identify the typical habitat types that occur on, or are likely to be found on the project site. Check all that apply:

☐ Shoreline ☑ Forest ☐ Agricultural/grasslands ☐ Early mid-successional

☐ Wetland ☐ Urban ☑ Suburban

	NO	YES
15. Does the site of the proposed action contain any species of animal, or associated habitats, listed by the State or Federal government as threatened or endangered?	☑	☐
16. Is the project site located in the 100 year flood plain?	☑	☐
17. Will the proposed action create storm water discharge, either from point or non-point sources? If Yes, a. Will storm water discharges flow to adjacent properties? ☐ NO ☐ YES	☑	☐
b. Will storm water discharges be directed to established conveyance systems (runoff and storm drains)? If Yes, briefly describe: ☐ NO ☐ YES _____		

	NO	YES
18. Does the proposed action include construction or other activities that result in the impoundment of water or other liquids (e.g. retention pond, waste lagoon, dam)? If Yes, explain purpose and size:	☑	☐
19. Has the site of the proposed action or an adjoining property been the location of an active or closed solid waste management facility? If Yes, describe:	☑	☐
20. Has the site of the proposed action or an adjoining property been the subject of remediation (ongoing or completed) for hazardous waste? If Yes, describe:	☑	☐

I AFFIRM THAT THE INFORMATION PROVIDED ABOVE IS TRUE AND ACCURATE TO THE BEST OF MY KNOWLEDGE

Applicant/sponsor name: Michael Landler Date: 8/17/22

Signature: Michael Landler

PRINT FORM

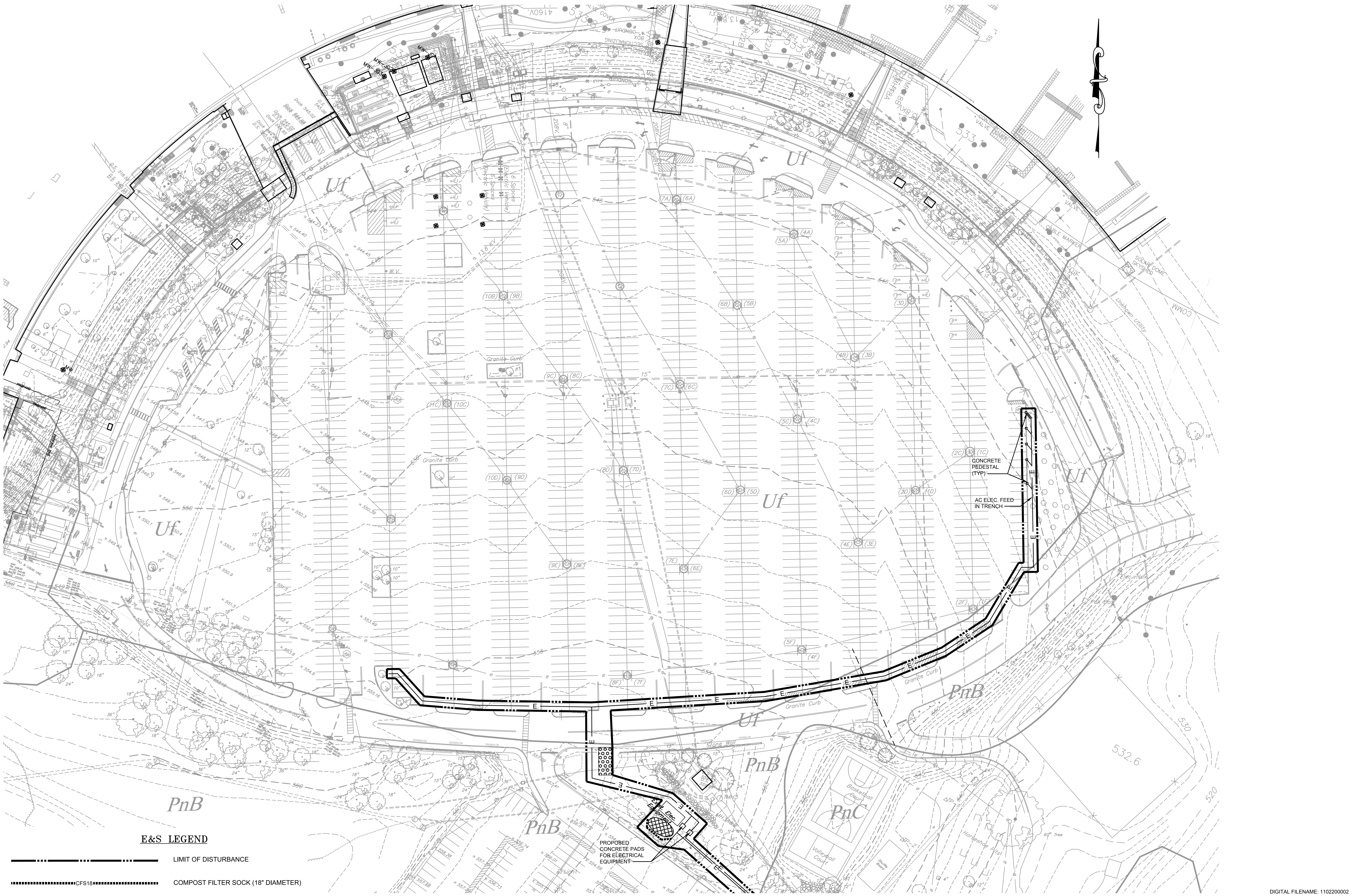

FOR CONTINUATION SEE DRAWING NO. C.2-51

E&S LEGEND

- LIMIT OF DISTURBANCE
- CFS18 — COMPOST FILTER SOCK (18" DIAMETER)
- ROCK CONSTRUCTION ENTRANCE
- PnB / PnC — SOIL BOUNDARY AND TYPES
- TOPSOIL STOCKPILE AREA
- CONCRETE WASHOUT

SOILS

SYMBOL	DESCRIPTION
PnB	PAXTON FINE SANDY LOAM, 3 TO 8 PERCENT SLOPES
PnC	PAXTON FINE SANDY LOAM, 8 TO 15 PERCENT SLOPES
Sh	SUN LOAM
Uf	URBAN LAND
W	WATER
WdB	WOODBRIDGE LOAM, 3 TO 8 PERCENT SLOPES

GRAPHIC SCALE

50' 25' 0' 50' 100'

Scale 1"=50'

DIGITAL FILENAME: 1102200002 C.2-50

110220.0002

Hill & Bell Associates Engineers, L.L.C.
Engineers / Consultants
1047 N. Park Road
P.O. Box 6307
Reading, PA 19610-0307
Ph: 610-621-2000
Fax: 610-621-2001

READING
1047 North Park Road
PO Box 6307
Reading, PA 19610-0307
610.621.2000
LANCASTER
701 Creekside Lane
Lititz, PA 17543
717.568.2678
LEHIGH VALLEY
Roma Corporate Center, Suite 106
1605 N Cedar Crest Blvd
Allentown, PA 18104
610.849.9700
WEST CHESTER
101 East Evans Street
West Chester, PA 19380
610.621.2000

SPOTTS, STEVENS & MCCOY
Engineers and Consultants
ssmgroup.com

THOMAS J. WATSON RESEARCH CENTER
YORKTOWN,N.Y.

FACILITIES DESIGN
COMPUTER GRAPHICS

FACILITIES ENGINEERING
REARRANGEMENT ENGINEERING
FACILITIES PLANNING

THIS DOCUMENT IS THE PROPERTY OF I.B.M. ITS USE IS AUTHORIZED ONLY FOR RESPONDING TO A REQUEST FOR QUOTATION OR FOR THE PERFORMANCE OF WORK FOR I.B.M. ALL QUOTATIONS MUST BE REFERRED TO THE I.B.M. PURCHASING DEPARTMENT.

NO.	DATE	DESCRIPTION	BY

REVISIONS

SHEET TITLE:

WATSON RESEARCH CENTER BESS AND EVSE SITE

CIVIL
EROSION & SEDIMENT CONTROL (E & SC) PLAN

DRAWN BY: KKS	SCALE: AS NOTED
CHECKED BY: JC	DATE: 08/30/22
PROJECT NO.	DRAWING NO.
SHEET 1 OF 4	C.2-50

FOR CONTINUATION SEE DRAWING NO. C.2-50

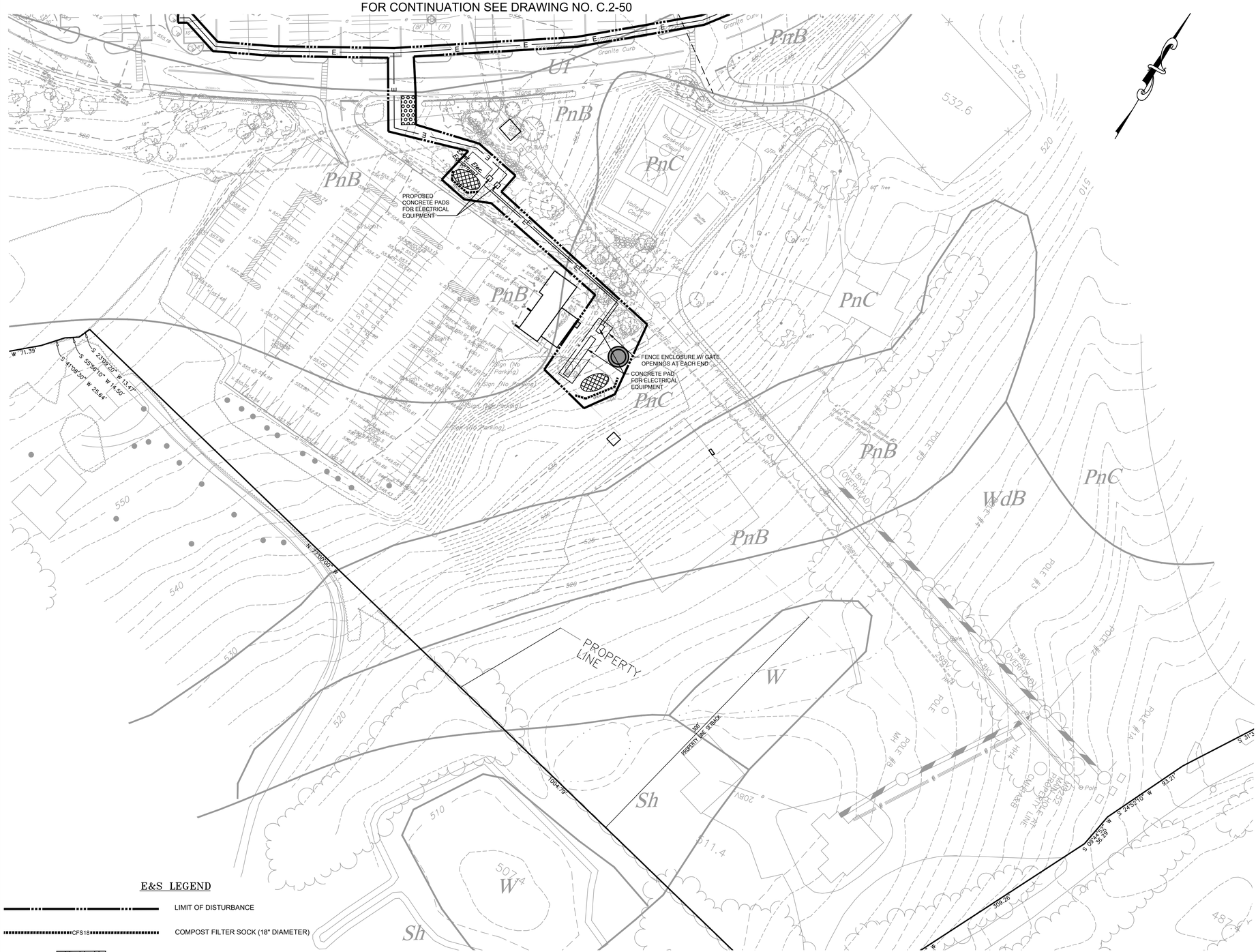

E&S LEGEND

	LIMIT OF DISTURBANCE
CFS18	COMPOST FILTER SOCK (18" DIAMETER)
	ROCK CONSTRUCTION ENTRANCE
PnB / PnC	SOIL BOUNDARY AND TYPES
	TOPSOIL STOCKPILE AREA
	CONCRETE WASHOUT

SOILS

SYMBOL	DESCRIPTION
PnB	*PAXTON FINE SANDY LOAM, 3 TO 8 PERCENT SLOPES*
PnC	*PAXTON FINE SANDY LOAM, 8 TO 15 PERCENT SLOPES*
Sh	*SUN LOAM*
Uf	*URBAN LAND*
W	*WATER*
WdB	*WOODBRIDGE LOAM, 3 TO 8 PERCENT SLOPES*

GRAPHIC SCALE

50' 25' 0' 50' 100'

Scale 1"=50'

DIGITAL FILENAME: 1102200002 C.2-51

110220.0002

Hill & Bell Associates Engineers, L.L.C.
Engineers / Consultants
1047 N. Park Road
P.O. Box 6307
Reading, PA 19610-0307
Ph: 610-621-2000
Fax: 610-621-2001

READING
1047 North Park Road
PO Box 6307
Reading, PA 19610-0307
610.621.2000
LANCASTER
701 Creekside Lane
Lititz, PA 17543
717.568.2078
LEHIGH VALLEY
Roma Corporate Center, Suite 106
1605 N Cedar Crest Blvd
Allentown, PA 18104
610.849.9700
WEST CHESTER
101 East Evans Street
West Chester, PA 19380
610.621.2000

SSM
SPOTTS, STEVENS & MCCOY
Engineers and Consultants
ssmgroup.com

IBM

THOMAS J. WATSON RESEARCH CENTER
YORKTOWN,N.Y.

FACILITIES DESIGN COMPUTER GRAPHICS

FACILITIES ENGINEERING
REARRANGEMENT ENGINEERING
FACILITIES PLANNING

THIS DOCUMENT IS THE PROPERTY OF I.B.M. ITS USE IS AUTHORIZED ONLY FOR RESPONDING TO A REQUEST FOR QUOTATION OR FOR THE PERFORMANCE OF WORK FOR I.B.M. ALL QUOTATIONS MUST BE REFERRED TO THE I.B.M. PURCHASING DEPARTMENT.

NO.	DATE	DESCRIPTION	BY

REVISIONS

SHEET TITLE:
WATSON RESEARCH CENTER
BESS AND EVSE SITE

CIVIL
EROSIION & SEDIMENT CONTROL (E & SC) PLAN

DRAWN BY: KKS	SCALE: AS NOTED
CHECKED BY: JC	DATE: 08/30/22
PROJECT NO.	DRAWING NO. C.2-51
SHEET 2 OF 4	

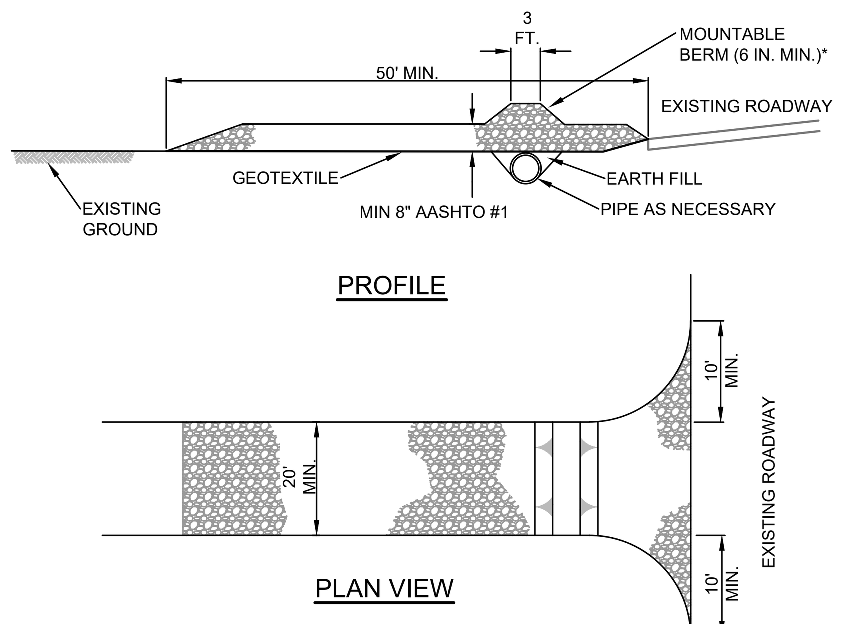

PROFILE

PLAN VIEW

* MOUNTABLE BERM USED TO PROVIDE PROPER COVER FOR PIPE

NOTES:

REMOVE TOPSOIL PRIOR TO INSTALLATION OF ROCK CONSTRUCTION ENTRANCE. EXTEND ROCK OVER FULL WIDTH OF ENTRANCE.

RUNOFF SHALL BE DIVERTED FROM ROADWAY TO A SUITABLE SEDIMENT REMOVAL BMP PRIOR TO ENTERING ROCK CONSTRUCTION ENTRANCE.

MOUNTABLE BERM SHALL BE INSTALLED WHEREVER OPTIONAL CULVERT PIPE IS USED AND PROPER PIPE COVER AS SPECIFIED BY MANUFACTURER IS NOT OTHERWISE PROVIDED. PIPE SHALL BE SIZED APPROPRIATELY FOR SIZE OF DITCH BEING CROSSED.

MAINTENANCE: ROCK CONSTRUCTION ENTRANCE THICKNESS SHALL BE CONSTANTLY MAINTAINED TO THE SPECIFIED DIMENSIONS BY ADDING ROCK. A STOCKPILE SHALL BE MAINTAINED ON SITE FOR THIS PURPOSE. ALL SEDIMENT DEPOSITED ON PAVED ROADWAYS SHALL BE REMOVED AND RETURNED TO THE CONSTRUCTION SITE IMMEDIATELY. IF EXCESSIVE AMOUNTS OF SEDIMENT ARE BEING DEPOSITED ON ROADWAY, EXTEND LENGTH OF ROCK CONSTRUCTION ENTRANCE BY 50 FOOT INCREMENTS UNTIL CONDITION IS ALLEVIATED OR INSTALL WASH RACK. WASHING THE ROADWAY OR SWEEPING THE DEPOSITS INTO ROADWAY DITCHES, SEWERS, CULVERTS, OR OTHER DRAINAGE COURSES IS NOT ACCEPTABLE.

STANDARD CONSTRUCTION DETAIL ROCK CONSTRUCTION ENTRANCE

NOT TO SCALE

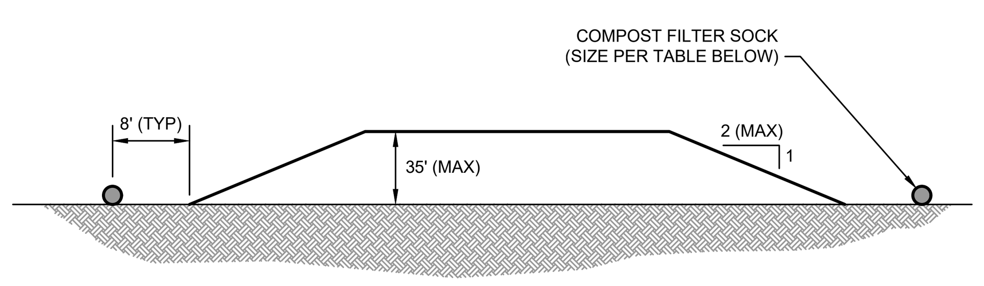

MAXIMUM STOCKPILE HEIGHT	COMPOST FILTER SOCK DIAMETER	SILT FENCE EQUIVALENT
<10 FT.	12"	18"
10 FT. - 20 FT.	18"	30"
20 FT. - 35 FT.	24"	N/A

NOTES:
1. STOCKPILE HEIGHT SHALL NOT EXCEED 35'.
2. SOIL STOCKPILES SHALL BE SEEDED IN ACCORDANCE WITH THE TEMPORARY SEEDING SPECIFICATIONS, AT THE END OF EACH WORKING DAY.
3. STOCKPILES SHALL BE SURROUNDED BY APPROPRIATE COMPOST FILTER SOCK OR EQUIVALENT SILT FENCE (OR ALONG THE DOWNSLOPE EDGE IF ON A SLOPE) ALONG EXISTING LEVEL GRADE AT LEAST 8' FROM THE BASE OF THE STOCKPILE SIDE SLOPES. ACCUMULATED SEDIMENT SHALL BE REMOVED ONCE IT REACHES 1/2 THE HEIGHT OF THE SOCKS.

SOIL STOCKPILE

NOT TO SCALE

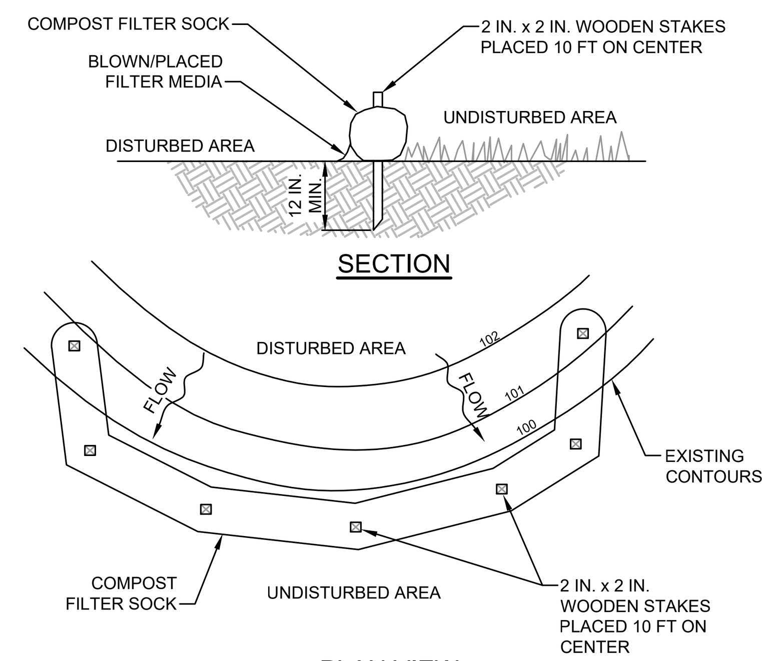

SECTION

PLAN VIEW

NOTES:

SOCK FABRIC SHALL MEET STANDARDS OF TABLE 4.1 OF THE PA DEP EROSION CONTROL MANUAL. COMPOST SHALL MEET THE STANDARDS OF TABLE 4.2 OF THE PA DEP EROSION CONTROL MANUAL.

COMPOST FILTER SOCK SHALL BE PLACED AT EXISTING LEVEL GRADE. BOTH ENDS OF THE BARRIER SHALL BE EXTENDED AT LEAST 8 FEET UP SLOPE AT 45 DEGREES TO THE MAIN BARRIER ALIGNMENT. MAXIMUM SLOPE LENGTH ABOVE ANY BARRIER SHALL NOT EXCEED THAT SPECIFIED FOR THE SIZE OF THE SOCK AND THE SLOPE OF ITS TRIBUTARY AREA.

TRAFFIC SHALL NOT BE PERMITTED TO CROSS COMPOST FILTER SOCKS.

ACCUMULATED SEDIMENT SHALL BE REMOVED WHEN IT REACHES 1/2 THE ABOVE GROUND HEIGHT OF THE BARRIER AND DISPOSED IN THE MANNER DESCRIBED ELSEWHERE IN THE PLAN.

COMPOST FILTER SOCKS SHALL BE INSPECTED WEEKLY AND AFTER EACH RUNOFF EVENT. DAMAGED SOCKS SHALL BE REPAIRED ACCORDING TO MANUFACTURER'S SPECIFICATIONS OR REPLACED WITHIN 24 HOURS OF INSPECTION.

BIODEGRADABLE COMPOST FILTER SOCKS SHALL BE REPLACED AFTER 6 MONTHS; PHOTODEGRADABLE SOCKS AFTER 1 YEAR. POLYPROPYLENE SOCKS SHALL BE REPLACED ACCORDING TO MANUFACTURER'S RECOMMENDATIONS.

UPON STABILIZATION OF THE AREA TRIBUTARY TO THE SOCK, STAKES SHALL BE REMOVED. THE SOCK MAY BE LEFT IN PLACE AND VEGETATED OR REMOVED. IN THE LATTER CASE, THE MESH SHALL BE CUT OPEN AND THE MULCH SPREAD AS A SOIL SUPPLEMENT.

TABLE 4.1
COMPOST SOCK FABRIC MINIMUM SPECIFICATIONS

MATERIAL TYPE	3 mil HDPE	5 mil HDPE	5 mil HDPE	MULTI-FILAMENT POLYPROPYLENE (MFPP)	HEAVY DUTY MULTI-FILAMENT POLYPROPYLENE (HDMFPP)
MATERIAL CHARACTERISTICS	PHOTO-DEGRADABLE	PHOTO-DEGRADABLE	BIO-DEGRADABLE	PHOTO-DEGRADABLE	PHOTO-DEGRADABLE
SOCK DIAMETERS	12" 18"	12" 18" 24" 32"	12" 18" 24" 32"	12" 18" 24" 32"	12" 18" 24" 32"
MESH OPENING	3/8"	3/8"	3/8"	3/8"	1/8"
TENSILE STRENGTH	-	26 psi	26 psi	44 psi	202 psi
ULTRAVIOLET STABILITY % ORIGINAL STRENGTH (ASTM G-155)	23% at 1000 hr.	23% at 1000 hr.	-	100% at 1000 hr.	100% at 1000 hr.
MINIMUM FUNCTIONAL LONGEVITY	6 MONTHS	9 MONTHS	6 MONTHS	1 YEAR	2 YEARS

TWO-PLY SYSTEMS

INNER CONTAINMENT NETTING	HDPE BIAXIAL NET
	CONTINUOUSLY WOUND
	FUSION-WELDED JUNCTURES
	3/4"X3/4" MAX. APERTURE SIZE
OUTER FILTRATION MESH	COMPOSITE POLYPROPYLENE FABRIC (WOVEN LAYER & NON-WOVEN FLEECE MECHANICALLY FUSED VIA NEEDLE PUNCH)
	3/16" MAX. APERTURE SIZE
SOCK FABRICS COMPOSED OF BURLAP MAY BE USED ON PROJECTS LASTING 6 MONTHS OR LESS	

TABLE 4.2
COMPOST STANDARDS

ORGANIC MATTER CONTENT	25% - 100% (DRY WEIGHT BASIS)
ORGANIC PORTION	FIBROUS AND ELONGATED
pH	5.5 - 8.5
MOISTURE CONTENT	30% - 60%
PARTICLE SIZE	30% - 50% PASS THROUGH 3/8" SIEVE
SOLUBLE SALT CONCENTRATION	5.0 dS/m (mmhos/cm) MAXIMUM

STANDARD CONSTRUCTION DETAIL COMPOST FILTER SOCK

NOT TO SCALE

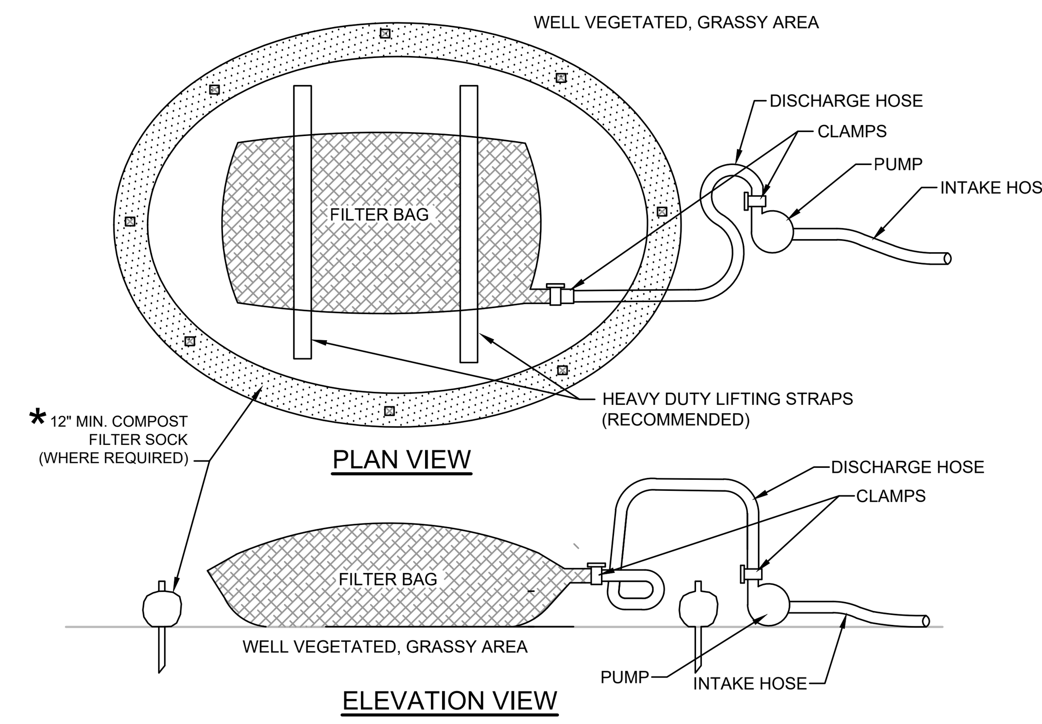

PLAN VIEW

ELEVATION VIEW

NOTES:

LOW VOLUME FILTER BAGS SHALL BE MADE FROM NON-WOVEN GEOTEXTILE MATERIAL SEWN WITH HIGH STRENGTH, DOUBLE STITCHED "J" TYPE SEAMS. THEY SHALL BE CAPABLE OF TRAPPING PARTICLES LARGER THAN 150 MICRONS. HIGH VOLUME FILTER BAGS SHALL BE MADE FROM WOVEN GEOTEXTILES THAT MEET THE FOLLOWING STANDARDS:

PROPERTY	TEST METHOD	MINIMUM STANDARD
AVG. WIDE WIDTH STRENGTH	ASTM D-4884	60 LB/IN
GRAB TENSILE	ASTM D-4632	205 LB
PUNCTURE	ASTM D-4833	110 LB
MULLEN BURST	ASTM D-3786	350 PSI
UV RESISTANCE	ASTM D-4355	70%
AOS % RETAINED	ASTM D-4751	80 SIEVE

A SUITABLE MEANS OF ACCESSING THE BAG WITH MACHINERY REQUIRED FOR DISPOSAL PURPOSES SHALL BE PROVIDED. FILTER BAGS SHALL BE REPLACED WHEN THEY BECOME 1/2 FULL OF SEDIMENT. SPARE BAGS SHALL BE KEPT AVAILABLE FOR REPLACEMENT OF THOSE THAT HAVE FAILED OR ARE FILLED. BAGS SHALL BE PLACED ON STRAPS TO FACILITATE REMOVAL UNLESS BAGS COME WITH LIFTING STRAPS ALREADY ATTACHED.

BAGS SHALL BE LOCATED IN WELL-VEGETATED (GRASSY) AREA, AND DISCHARGE ONTO STABLE, EROSION RESISTANT AREAS. WHERE THIS IS NOT POSSIBLE, A GEOTEXTILE UNDERLAYMENT AND FLOW PATH SHALL BE PROVIDED. BAGS MAY BE PLACED ON FILTER STONE TO INCREASE DISCHARGE CAPACITY. BAGS SHALL NOT BE PLACED ON SLOPES GREATER THAN 5%. FOR SLOPES EXCEEDING 5%, CLEAN ROCK OR OTHER NON-ERODIBLE AND NON-POLLUTING MATERIAL MAY BE PLACED UNDER THE BAG TO REDUCE SLOPE STEEPNESS.

* NO DOWNSLOPE SEDIMENT BARRIER IS REQUIRED FOR MOST INSTALLATIONS. COMPOST BERM OR 12" COMPOST FILTER SOCK SHALL BE INSTALLED BELOW BAGS LOCATED IN HQ OR EV WATERSHEDS, WITHIN 50 FEET OF ANY RECEIVING SURFACE WATER OR WHERE GRASSY AREA IS NOT AVAILABLE.

THE PUMP DISCHARGE HOSE SHALL BE INSERTED INTO THE BAGS IN THE MANNER SPECIFIED BY THE MANUFACTURER AND SECURELY CLAMPED. A PIECE OF PVC PIPE IS RECOMMENDED FOR THIS PURPOSE.

THE PUMPING RATE SHALL BE NO GREATER THAN 750 GPM OR 1/2 THE MAXIMUM SPECIFIED BY THE MANUFACTURER, WHICHEVER IS LESS. PUMP INTAKES SHALL BE FLOATING AND SCREENED.

FILTER BAGS SHALL BE INSPECTED DAILY. IF ANY PROBLEM IS DETECTED, PUMPING SHALL CEASE IMMEDIATELY AND NOT RESUME UNTIL THE PROBLEM IS CORRECTED.

STANDARD CONSTRUCTION DETAIL #3-16 PUMPED WATER FILTER BAG

NOT TO SCALE

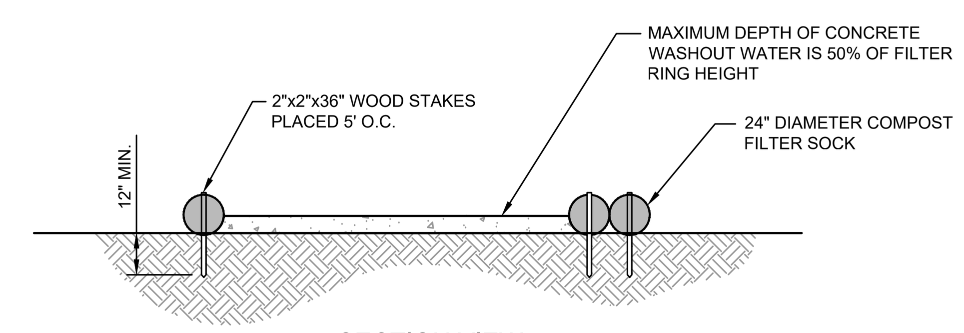

SECTION VIEW

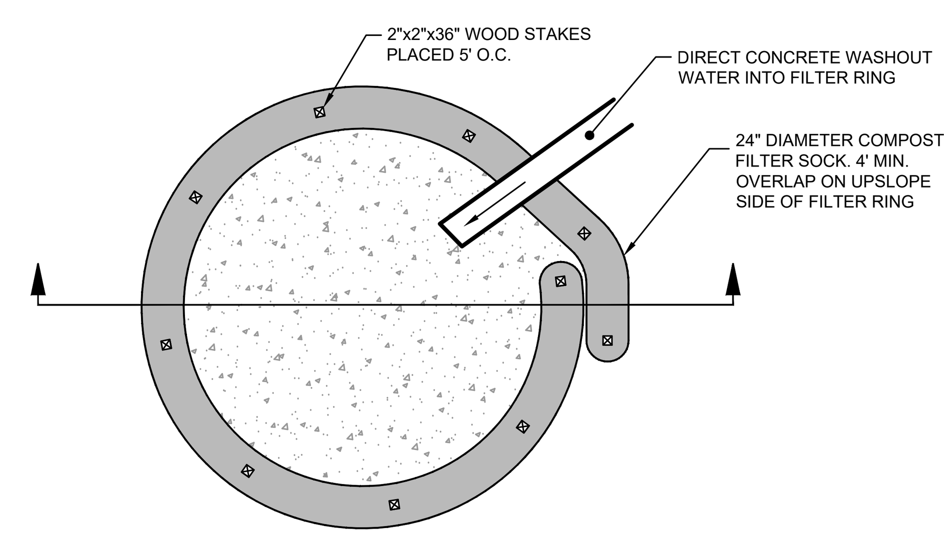

PLAN VIEW

NOTES
1. INSTALL ON FLAT GRADE FOR OPTIMUM PERFORMANCE.
2. 18" DIAMETER FILTER SOCK MAY BE STACKED ONTO DOUBLE 24" DIAMETER SOCKS IN PYRAMIDAL CONFIGURATION FOR ADDED HEIGHT.

COMPOST SOCK WASHOUT

NOT TO SCALE

EXCAVATION PROTOCOL
TJ WATSON RESEARCH CENTER
EXCAVATION CHECKLIST

AREA OF EXCAVATION WORK ____________

1. ARE THE AREA DRAWING(S) OF EXISTING UTILITIES IN HAND AT THE EXCAVATION SITE? (CIRCLE ANSWER) Y OR N
DRAWING NUMBER(S) & DATE(S)
2. HAS THE AREA OF EXCAVATION BEEN MARKED OUT IN THE FIELD? (CIRCLE ANSWER) Y OR N
3. HAVE THE LINE AND GRADE OF KNOWN UTILITIES BEEN MARKED (INCLUDING ADJACENT UTILITIES) AT THE EXCAVATION SITE? (CIRCLE ANSWER) Y OR N
4. HAS THE APPROPRIATE TESTING (I.E. GPR, IMAGING, ETC.) OF UNDERGROUND UTILITIES BEEN COMPLETED? (CIRCLE ANSWER) Y OR N
5. HAS THE FOREMAN AND DIGGING CREW BEEN REMINDED ONLY HAND DIGGING WAS ALLOWED WITHIN 3 FEET OF KNOWN UTILITIES? (CIRCLE ANSWER) Y OR N
6. IS THE EQUIPMENT USED SUITABLE FOR THIS EXCAVATION? (CIRCLE ANSWER) Y OR N

DIGGING EQUIPMENT TO BE USED ____________

WORKERS IN CREW (NAMES) ____________

CM SUPERINTENDENT / CONTRACTOR SUPERINTENDENT SIGNATURES:

DATE: DATE:

REVISION: XX DATE: XX/XX/XX BY: XX

THIS DOCUMENT IS THE PROPERTY OF IBM. ITS USE IS AUTHORIZED ONLY FOR RESPONDING TO A REQUEST FOR QUOTATION OR FOR THE PERFORMANCE OF WORK FOR IBM. ALL QUOTATIONS MUST BE REFERRED TO THE IBM PURCHASING DEPARTMENT.

IBM T.J. WATSON RESEARCH CENTER, YORKTOWN, N.Y., FACILITIES ENGINEERING DEPARTMENT | EXCAVATION CHECKLIST | DRAWN BY: ALO | DATE: 10/23/07 | NO SCALE | DWG: SAD-018 A-DETL-0018

EXCAVATION DRAWING NOTES

1. THE LOCATION OF EXISTING UNDERGROUND STRUCTURES AND UTILITIES ARE SHOWN IN AN APPROXIMATE WAY ONLY AND HAVE NOT BEEN INDEPENDENTLY VERIFIED BY THE OWNERS OR THEIR REPRESENTIVE.
2. THE CONTRACTOR SHALL EMPLOY ALL MEANS, METHODS, TECHNIQUES AND PROCEDURES AVAILABLE TO DETERMINE THE EXACT LOCATION OF ALL EXISTING UTILITIES AND STRUCTURES **BEFORE** COMMENCING EXCAVATION WORK. SUCH MEANS, METHODS, TECHNIQUES AND PROCEDURES SHALL INCLUDE, BUT NOT BE LIMITED TO, EXPLORATORY TEST PITS AND USE OF SPECIALIZED ELECTROMAGNETIC INSTRUMENTS TO TRACE THE LATERAL AND VERTICAL POSITION OF SUBSURFACE, PRE-EXISITNG STRUCTURES AND UTILITIES.
3. IT IS THE RESPONSIBILITY OF THE CONTRACTOR TO MARK-OUT THE LOCATION OF SUBSURFACE STRUCTURES AND UTILITIES WITHIN THE WORK LIMITS PRIOR TO THE COMMENCEMENT OF EXCAVATION AND TO MAINTAIN SAID MARKINGS WITHIN PROJECT LIMITS FOR THE DURATION OF THE PROJECT. IF THE MARKINGS ARE OBLITERATED, THE CONTRACTOR IS RESPONSIBLE TO REINSTATE SUCH MARKINGS PRIOR TO THE CONTINUANCE OF WORK.
4. THE CONTRACTOR IS SPECIFICALLY CAUTIONED TO TAKE MEAUREMENTS AND TO MAINTAIN WRITTEN RECORDS OF UTILITIES AND SUBSURFACE STRUCTURES IN THE FIELD. THE CONTRACTOR ALSO AGREES TO BE FULLY RESPONSIBLE FOR ANY AND ALL DAMAGES WHICH MAY BE OCCASIONED BY THE CONTRACTOR'S FAILURE TO EXACTLY LOCATE AND PERSERVE ANY AND ALL UNDERGROUND UTILITIES AND STRUCTURES.

REVISION: XX DATE: XX/XX/XX BY: XX

THIS DOCUMENT IS THE PROPERTY OF IBM. ITS USE IS AUTHORIZED ONLY FOR RESPONDING TO A REQUEST FOR QUOTATION OR FOR THE PERFORMANCE OF WORK FOR IBM. ALL QUOTATIONS MUST BE REFERRED TO THE IBM PURCHASING DEPARTMENT.

IBM T.J. WATSON RESEARCH CENTER, YORKTOWN, N.Y., FACILITIES ENGINEERING DEPARTMENT | EXCAVATION DRAWING NOTES | DRAWN BY: ALO | DATE: 10/24/07 | NO SCALE | DWG: SAD-019 A-DETL-0019

EXCAVATION PROTOCOL

1. THE INTENT OF THIS DOCUMENT IS TO PROVIDE GUIDANCE FOR CONTRACTORS PERFORMING EXCAVATION ON THE GROUNDS OF THE T. J. WATSON RESEARCH CENTER WHERE BURIED SERVICES MAY ALREADY EXIST.
2. THROUGH USE OF THIS PROTOCOL IN CONJUNCTION WITH SITE DRAWINGS THE CHANCES OF INADVERTENTLY LOCATING BURIED SERVICES (WHICH MAY OR MAY NOT BE ACCURATELY DEPICTED ON SITE DRAWINGS) SHOULD MINIMIZE THE POSSIBILITY OF ANY PRODUCTIVITY LOSSES FOR THE CONTRACTOR AS WELL AS POTENTIAL SERVICE DISRUPTIONS TO THE SITE.
3. IN THE EVENT OF AN ACCIDENT OR SERVICE DISRUPTION, THE CONTRACTOR SHALL IMMEDIATELY PICK UP ANY IBM PHONE AND DIAL X-3333 TO REPORT THE INCIDENT.

PREVENTIVE MEASURES

PRIOR TO HEAVY EXCAVATION
PREPLANNING THE DAY BEFORE/ MORNING OF EXCAVATION:
1. THE DAY PRIOR TO EXCAVATION, THE CONTRACTOR'S FOREMAN, CM SUPERINTENDENT AND EXCAVATION TEAM WILL PREVIEW THE DRAWINGS AND NEXT DAYS PLANNED WORK AREA(S) TO IDENTIFY POTENTIAL SERVICE CONIFLCTS.
2. THE AREA(S) OF EXCAVATION SHALL BE CLEARLY IDENTIFIED IN THE FIELD WITH APPROVED MARKING PAINT. LINE GRADES OF KNOWN UTILITIES BOTH WITHIN AND IMMEDIATELY ADJACENT TO THE EXCAVATION SHALL BE CLEARLY MARKED WITH APPROVED MARKING PAINT IN THE PLANNED EXCAVATION AREA.
3. THE EXCAVATION CHECKLIST SHALL BE COMPLETED BY THE CONTRACTOR'S FOREMEN FOR EACH SEPARATE EXCAVATION ON A DAILY BASIS. THE CHECKLIST SHALL BE REVIEWED WITH THE CM SUPERINTENDENT WHO WILL MAINTAIN THE SIGNED DOCUMENT IN A FILE.

EXCAVATION
1. THE CONTRACTOR'S FOREMAN AND OPERATOR'S AT THE EXCAVATION SITE WILL HAVE A SET OF DRAWINGS SHOWING UTILITIES.
2. NO DEVIATION FROM THE PLANNED EXCAVATION FOR THAT DAY SHALL PROCEED WITHOUT PROPER AUTHORIZATION FROM THE IBM COORDINATOR.
3. NO EXCAVATION WORK SHALL CONTINUE AFTER 3:30 PM WEEKDAYS OR ON WEEKENDS. THIS IS INSTITUTED TO AVOID THE POSSIBILITY OF AN ACCIDENTAL SERVICE DISRUPTION AFTER THE SITE RESPONSE TEAMS HAVE LEFT FOR THE DAY OR WEEKEND.
4. IN AREAS OF SUSPECTED CONFLICTS WITH EXISTING UTILITIES THE CONTRACTOR SHALL EXCAVATE A TEST PIT UTILIZING EXTREME CARE TO AVOID CONTACT WITH BURIED SERVICE(S).
5. EXCAVATIONS SHOULD PROGRESS WITH HAND EXCAVATION, THEN A SMALL BACKHOE (NOT A LARGE EXCAVATOR).
6. HAND DIGGING WILL TAKE PLACE WITHIN 3 FEET OF KNOWN UTILITIES.
7. THE IBM PM SHALL MEET WITH THE CM TO DETERMINE WHERE SURVEYORS SHALL MONITOR AREAS DURING EXCAVATION TO INSURE NO OTHER CONFLICTS ARISE.
8. IF REQUIRED, AS SERVICES ARE UNCOVERED, (BOTH EXISTING AND UNKNOWN), THE CONTRACTOR SHALL SURVEY LOCATION AND DEPTH OF THE EXISTING SERVICE AND NOTE THIS INFORMATION ON THE AS BUILT DRAWINGS WHICH WILL BE TURNED OVER TO IBM AT THE END OF THE PROJECT. IF SERVICE IDENTIFICATION CAN NOT EASILY BE MADE, THE CONTRACTOR SHALL NOTIFY THE CM SUPERINTENDENT AND IBM COORDINATOR.

BURIED PIPE IDENTIFICATION
1. THE CONTRACTOR SHALL IDENTIFY NEW AND EXISTING BURIED SERVICE(S), SURVEY LOCATION AND DEPTH OF THE SERVICE AND NOTE THIS INFORMATION ON THE AS BUILT DRAWINGS WHICH WILL BE TURNED OVER TO IBM AT THE END OF THE PROJECT.
2. BACKFILL OF NEW AND EXISTING SERVICES WHICH HAVE BEEN UNCOVERED SHALL CONSIST OF THE FOLLOWING: PLACE 18" LAYER OF WHITE SAND AROUND BURIED LINE. (NOTE- SUPPLIER OF SAND MUST BE PRE-APPROVED BY IBM PRIOR TO DELIVERY TO SITE).
3. PLACE METAL WARNING TAPE 1 FOOT ABOVE CONCRETE.
4. SOIL BACKFILL AND TOPPING AS CALLED FOR. (NOTE - IF BACKFILL MATERIAL IS TO BE BROUGHT IN FROM OFF SITE, THE SUPPLIER MUST BE PRE-APPROVED BY IBM PRIOR TO DELIVERY).

REVISION: XX DATE: XX/XX/XX BY: XX

THIS DOCUMENT IS THE PROPERTY OF IBM. ITS USE IS AUTHORIZED ONLY FOR RESPONDING TO A REQUEST FOR QUOTATION OR FOR THE PERFORMANCE OF WORK FOR IBM. ALL QUOTATIONS MUST BE REFERRED TO THE IBM PURCHASING DEPARTMENT.

IBM T.J. WATSON RESEARCH CENTER, YORKTOWN, N.Y., FACILITIES ENGINEERING DEPARTMENT | EXCAVATION PROTOCOL NOTES | DRAWN BY: ALO | DATE: 10/25/07 | NO SCALE | DWG: SAD-020 A-DETL-0020

DIGITAL FILENAME: 1102200002 C.2-52

110220.0002

Hill & Bell Associates Engineers, L.L.C.
Engineers / Consultants
1047 N. Park Road
P.O. Box 6307
Reading, PA 19610-0307
Ph: 610-621-2000
Fax: 610-621-2001

READING
1047 North Park Road
PO Box 6307
Reading, PA 19610-0307
610.621.2000
LANCASTER
701 Creekside Lane
Lititz, PA 17543
717.568.2678
LEHIGH VALLEY
Roma Corporate Center, Suite 106
1605 N Cedar Crest Blvd
Allentown, PA 18104
610.849.9700
WEST CHESTER
101 East Evans Street
West Chester, PA 19380
610.621.2000

SSM
SPOTTS, STEVENS & MCCOY
Engineers and Consultants
ssmgroup.com

IBM

THOMAS J. WATSON
RESEARCH CENTER
YORKTOWN,N.Y.

FACILITIES DESIGN
COMPUTER GRAPHICS

FACILITIES ENGINEERING
REARRANGEMENT ENGINEERING
FACILITIES PLANNING

THIS DOCUMENT IS THE PROPERTY OF I.B.M. ITS USE IS AUTHORIZED ONLY FOR RESPONDING TO A REQUEST FOR QUOTATION OR FOR THE PERFORMANCE OF WORK FOR I.B.M. ALL QUOTATIONS MUST BE REFERRED TO THE I.B.M. PURCHASING DEPARTMENT.

NO.	DATE	DESCRIPTION	BY

REVISIONS

SHEET TITLE:
WATSON RESEARCH CENTER
BESS AND EVSE SITE

CIVIL
E & SC PLAN DETAILS

DRAWN BY: KKS	SCALE: AS NOTED
CHECKED BY: JC	DATE: 08/30/22
PROJECT NO.	DRAWING NO. C.2-52
SHEET 2 OF 3	

GENERAL EROSION AND SEDIMENTATION CONTROL NOTES:

1. THE CONTRACTOR SHALL TAKE INTO ACCOUNT THE LOCAL WEATHER FORECAST PRIOR TO BEGINNING ANY EXCAVATION ACTIVITIES.
2. SOIL MAY NEED TO BE STOCKPILED WHILE CONSTITUENT TESTING TAKES PLACE.
3. THE CONTRACTOR SHALL REMOVE FROM THE CONSTRUCTION AREA AND RECYCLE OR DISPOSE OF ALL BUILDING MATERIALS AND WASTES AS APPROVED BY IBM ENVIRONMENTAL AND IN ACCORDANCE WITH THE STATE'S SOLID AND HAZARDOUS WASTE MANAGEMENT REGULATIONS.
4. BEFORE DISPOSING OF SOIL OR RECEIVING BORROW FOR THE SITE, THE CONTRACTOR SHALL ASSURE THAT EACH SPOIL OR BORROW AREA IS APPROVED BY BOTH IBM ENVIRONMENTAL AND THE APPROPRIATE STATE AGENCY.
5. THE CONTRACTOR IS RESPONSIBLE FOR THE INSTALLATION AND MAINTENANCE OF ALL EROSION AND SEDIMENTATION CONTROLS PROPOSED FOR THIS PROJECT. EROSION AND SEDIMENTATION CONTROLS MUST BE CONSTRUCTED, STABILIZED, AND FUNCTIONAL BEFORE SITE DISTURBANCE WITHIN THE TRIBUTARY AREAS OF THOSE CONTROLS.
6. AT THE END OF EACH WORKING DAY, ANY AND ALL SEDIMENT TRACKED ONTO OR CONVEYED ONTO ANY ADJACENT ROADS OR PARKING AREAS MUST BE REMOVED AND RETURNED TO THE CONSTRUCTION AREA. REMOVAL CAN BE COMPLETED THROUGH USE OF MECHANICAL OR HAND TOOLS, BUT SHALL NEVER BE WASHED OFF THE ROAD SURFACE WITH WATER.
7. ALL CONSTRUCTION VEHICLES SHALL ACCESS THE LIMITS OF DISTURBANCE VIA THE ASPHALT ROAD SURFACE. ALL CONSTRUCTION VEHICLES SHALL BE ADEQUATELY CLEANED OF ALL SEDIMENT PRIOR TO LEAVING THE SITE VIA THE ASPHALT ROAD SURFACE. OTHERWISE, ALL CONSTRUCTION VEHICLES SHALL LEAVE THE SITE VIA A FLATBED TRAILER. CONSTRUCTION VEHICLES SHALL BE ADEQUATELY CLEANED OF ALL SEDIMENT PRIOR TO BEING LOADED ON THE FLATBED TRAILER, AND SHALL BE LOADED WITHIN THE LIMITS OF DISTURBANCE. THE FLATBED TRAILER SHALL REMAIN ON THE ASPHALT SURFACE AT ALL TIMES. CLEANING OF SEDIMENT CAN BE COMPLETED THROUGH USE OF MECHANICAL OR HAND TOOLS, BUT SHALL NEVER BE WASHED OFF WITH WATER.
8. CONSTRUCTION MUST REMAIN WITHIN THE LIMITS OF DISTURBANCE UNTIL THE WORK IS STABILIZED.
9. AN AREA SHALL BE CONSIDERED TO HAVE ACHIEVED FINAL STABILIZATION WHEN IT HAS A MINIMUM OF 70% UNIFORM PERENNIAL VEGETATIVE COVER OR OTHER PERMANENT NON-VEGETATIVE COVER WITH A DENSITY SUFFICIENT TO RESIST ACCELERATED SURFACE EROSION AND SUBSURFACE CHARACTERISTICS SUFFICIENT TO RESIST SLIDING OR OTHER MOVEMENTS. AFTER FINAL SITE STABILIZATION HAS BEEN ACHIEVED, TEMPORARY EROSION AND SEDIMENTATION CONTROLS MUST BE REMOVED. AREAS DISTURBED DURING REMOVAL OF THE CONTROLS MUST BE STABILIZED IMMEDIATELY.
10. AFTER FINAL SITE STABILIZATION HAS BEEN ACHIEVED, TEMPORARY EROSION AND SEDIMENTATION CONTROLS MUST BE REMOVED. AREAS DISTURBED DURING REMOVAL OF THE CONTROLS MUST BE STABILIZED IMMEDIATELY ACCORDING TO IBM ENVIRONMENTAL AND TOWN STORMWATER AND EXCAVATION PERMIT.
11. ALL GRADING AND EXCAVATION SHALL BE DONE IN SUCH A WAY AS TO MINIMIZE EROSION. DISTURBED AREAS SHALL BE KEPT TO A PRACTICAL MINIMUM AND STABILIZED AS QUICKLY AS PRACTICAL.
12. INSTALL EROSION CONTROL BLANKET (NAG SC250 OR EQUAL) ON ALL SLOPES GREATER THAN 3:1.
13. STABILIZE ALL DISTURBED AREAS WITH TEMPORARY SEEDING AND MULCHING IF FOR ANY REASON CONSTRUCTION MUST CEASE.
14. ALL PUMPING OF SEDIMENT-LADEN WATER SHALL BE THROUGH A PUMPED WATER FILTER BAG DEVICE, OVER STABILIZED AREAS.
15. CONCRETE WASHOUT TO BE LOCATED AT ON SITE WATER PLANT. EXACT LOCATION TO BE COORDINATED WITH IBM ENVIRONMENTAL.
16. IF UNFORESEEN EROSIVE CONDITIONS DEVELOP DURING CONSTRUCTION, THE CONTRACTOR MUST TAKE IMMEDIATE ACTION TO REMEDY SUCH CONDITIONS AND TO PREVENT DAMAGE TO ADJACENT PROPERTIES AS A RESULT OF INCREASED RUNOFF AND/OR SEDIMENT DISPLACEMENT. STOCKPILES OF WOOD CHIPS, CRUSHED STONE, AND OTHER MULCHES SHALL BE HELD ON SITE TO DEAL IMMEDIATELY WITH EMERGENCY PROBLEMS OF EROSION.
17. SEDIMENT REMOVED FROM CONTROL FACILITIES MAY BE USED AS TOPSOIL, IF SUITABLE, OR SHALL BE PROPERLY DISPOSED PER IBM STANDARDS.
18. UNTIL THE SITE IS STABILIZED, ALL EROSION AND SEDIMENT CONTROLS MUST BE PROPERLY MAINTAINED. MAINTENANCE SHALL INCLUDE INSPECTIONS OF ALL EROSION AND SEDIMENT CONTROLS AFTER EACH STORM EVENT, AND ON A WEEKLY BASIS. ALL PREVENTATIVE AND REMEDIAL MAINTENANCE WORK, INCLUDING CLEAN OUT, REPAIR, REPLACEMENT, REGRADING, RESEEDING, REMULCHING, ETC. MUST BE PERFORMED IMMEDIATELY.
19. UPON TEMPORARY CESSATION OF AN EARTH DISTURBANCE OR ANY STAGE OR PHASE OF AN ACTIVITY WHERE A CESSATION OF EARTH DISTURBANCE ACTIVITIES EXCEED 4 DAYS, THE SITE SHALL BE IMMEDIATELY SEEDED, MULCHED, OR OTHERWISE PROTECTED FROM ACCELERATED EROSION AND SEDIMENTATION PENDING FUTURE EARTH DISTURBANCE ACTIVITIES.
20. UPON COMPLETION OF AN EARTH DISTURBANCE ACTIVITY OR ANY STAGE OR PHASE OF AN ACTIVITY, THE CONTRACTOR SHALL IMMEDIATELY STABILIZE THE DISTURBED AREAS SO AS TO PROTECT FROM ACCELERATED EROSION. DURING NON-GERMINATING PERIODS, MULCH MUST BE APPLIED AT THE SPECIFIED RATES. DISTURBED AREAS WHICH ARE NOT AT FINISHED GRADE AND WHICH WILL BE RE-DISTURBED WITHIN 1 YEAR MAY BE STABILIZED IN ACCORDANCE WITH TEMPORARY SEEDING SPECIFICATIONS. DISTURBED AREAS, WHICH ARE EITHER AT FINISHED GRADE OR WILL NOT BE RE-DISTURBED WITHIN 1 YEAR, MUST BE STABILIZED IN ACCORDANCE WITH PERMANENT SEEDING SPECIFICATIONS.
21. TOTAL DISTURBED AREA IS APPROXIMATELY 0.60 ACRES.

TEMPORARY E&SC MEASURES

EROSION AND SEDIMENT CONTROLS MUST BE CONSTRUCTED AND STABILIZED AND FUNCTIONAL PRIOR TO GENERAL SITE DISTURBANCE. THE TEMPORARY EROSION AND SEDIMENT CONTROL MEASURES, WHICH WILL BE USED DURING CONSTRUCTION, INCLUDE:

1. COMPOST FILTER SOCK
2. PUMPED WATER FILTER BAG
3. CONCRETE WASHOUT
4. ROCK CONSTRUCTION ENTRANCE

MAINTENANCE OF E&SC FACILITIES

1. THE CONTRACTOR WILL BE RESPONSIBLE FOR THE COMPLETE CONSTRUCTION, STABILIZATION AND MAINTENANCE OF ALL EROSION AND SEDIMENT CONTROL FACILITIES AS PER PERMIT REQUIREMENTS OR AUTHORITIES HAVING JURISDICTION.
2. ALL EROSION AND SEDIMENT CONTROL MEASURES SHALL BE INSPECTED AT LEAST ONCE A WEEK AND AFTER ALL SIGNIFICANT RAINFALLS FOR CONDITION AND INTEGRITY. ALL PREVENTATIVE AND REMEDIAL MAINTENANCE WORK, INCLUDING CLEAN OUT, REPAIR, REPLACEMENT, REGRADING, RESEEDING, REMULCHING, AND RENETTING MUST BE PERFORMED IMMEDIATELY. EROSION AND SEDIMENT CONTROLS MUST BE MAINTAINED IN THE FOLLOWING MANNER:

COMPOST FILTER SOCK:

A. INSPECT SOCKS AFTER EVERY RUNOFF EVENT. ANY NECESSARY REPAIRS SHALL BE MADE IMMEDIATELY.
B. REMOVE ACCUMULATED SEDIMENT AS NEEDED AND WHEN SEDIMENT ACCUMULATES TO 1/2 THE HEIGHT OF THE SOCKS.

PUMPED WATER FILTER BAG:

A. FILTER BAGS SHALL BE MADE FROM NON-WOVEN GEOTEXTILE MATERIAL WITH HIGH STRENGTH, DOUBLE STITCHED "J" TYPE SEAMS.
B. GEOTEXTILE MATERIAL SHALL BE CAPABLE OF TRAPPING PARTICLES LARGER THAN 150 MICRONS.
C. REPLACE FILTER BAGS WHEN THEY BECOME ONE-HALF FULL.
D. PLACE BAGS ON 6" AASHTO #57 STONE IN A WELL-VEGETATED AREA.
E. BAGS SHALL NOT BE PLACED ON SLOPES GREATER THAN 5%.

ROCK CONSTRUCTION ENTRANCE:

A. ROCK CONSTRUCTION ENTRANCE THICKNESS SHALL BE CONSTANTLY MAINTAINED TO THE SPECIFIED DIMENSIONS BY ADDING ROCK. A STOCKPILE OF ROCK MATERIAL SHALL BE MAINTAINED ON THE SITE FOR THIS PURPOSE. AT THE END OF EACH CONSTRUCTION DAY, ALL SEDIMENT DEPOSITED ON PUBLIC ROADWAYS SHALL BE REMOVED AND RETURNED TO THE CONSTRUCTION SITE.

CONCRETE WASHOUT:

A. WASHOUTS SHALL BE INSPECTED DAILY.
B. DAMAGED OR LEAKING WASHOUTS SHALL BE DEACTIVATED AND REPAIRED OR REPLACED IMMEDIATELY.
C. ACCUMULATED MATERIALS SHALL BE REMOVED WHEN THEY REACH 75% CAPACITY.
D. PLASTIC LINERS SHALL BE REPLACED WITH EACH CLEANING OF THE WASHOUT FACILITY.

BULK EARTHWORK GENERAL NOTES:

ALL EARTHWORK SHALL BE PERFORMED IN GENERAL ACCORDANCE WITH NYSDOT STANDARD SPECIFICATIONS, SECTIONS 200, 600, AND 700, LATEST ADDITION.

1. EXCAVATION NOTES:
   A. THE IBM TJ WATSON EXCAVATION PROTOCOL AS DEFINED IN SMD-119, SMD-120, AND SMD-121 MUST BE ADHERED TO FOR ALL EXCAVATION WORK. THESE DETAILS PROVIDE PREVENTATIVE MEASURES FOR IDENTIFYING AND WORKING NEAR BURIED UTILITIES.
   B. BEFORE STARTING EXCAVATION, REMOVE TOPSOIL TO ITS FULL DEPTH, FROM ALL AREAS THAT ARE TO BE FURTHER EXCAVATED, RELANDSCAPED OR REGRADED. DO NOT EXCAVATE FROZEN OR SATURATED TOPSOIL. NOTIFY THE PM OR IBM REGARDING SATURATED OR FROZEN TOPSOIL. THE CONTRACTOR WILL NOTIFY IBM IF ADDITIONAL TOPSOIL IS NEEDED OR REQUIRED TO ADAQUATELY COVER THE PROPOSED FINISHED EXCAVATION AREA.
   C. TOPSOIL SHALL BE STOCKPILED AT THE SITE AS DIRECTED FOR USE IN FURTHER FINISH GRADING. ALL STOCKPILES SHALL RECEIVE TEMPORARY SEEDING WITH EITHER WINTER RYE FOR STABLIZATION OVER IN THE WINTER OR ANNUAL RYE GRASS FOR SHORT TERM STABILIZATION IN SPRING THROUGH FALL. STOCKPILES SHALL ALSO HAVE EROSION CONTROL MEASURES WHICH INCLUDE BOTH A RING OF SILT FENCE AND HAY BALES.
   D. AFTER REMOVAL OF TOPSOIL, THE EXPOSED SUBGRADE SHALL BE PROOF-ROLLED WITH APPROVED CONSTRUCTION EQUIPMENT, SUCH AS A LOADED 10-TON STATIC CAPACITY ROLLER. THE MINIMUM EXTENT OF PROOF-ROLLING SHALL CONSIST OF TWO (2) PASSES WITH APPROVED EQUIPMENT OVER THE ENTIRE AREA RECEIVING NEW FILL.
   E. UNSTABLE AREAS SHALL EITHER BE EXCAVATED, SCARIFIED, AERATED AND RE-COMPACTED PRIOR TO FILL PLACEMENT, OR BE REMOVED AND REPLACED WITH CONTROLLED FILL.
   F. THE EXPOSED SUBGRADE SHALL BE INSPECTED BY THE GEOTECHNICAL ENGINEER AND TESTED BY PROOF-ROLLING, AS DESCRIBED ABOVE, PRIOR TO PLACEMENT OF COMPACTED FILL.
   G. IF CONSTRUCTION STOPS FOR GREATER THAN 20 DAYS ALL DISTURBED AREAS ARE TO BE SEEDED AND HAY MULCHED THE WITH APPROPRIATE SEED.
   H. THE CONTRACTOR IS REPSONSIBLE FOR ADAQUATE COMPACTION AND MUST FILL ANY POST CONSTRUCTION SETTLED AREAS. SETTLED AREAS ARE TO BE FILLED, GRADED, SEEDED AND HAY/STRAW MULCHED AS NEEDED.
2. FILL MATERIALS:
   A. SATISFACTORY MATERIALS PLACED WITHIN SUBGRADE AREAS SHALL CONSIST OF AASHTO CLASSIFICATION A-1-A OR A-1-B SOILS FREE OF EXCESSIVE SILT AND CLAY.
   B. SATISFACTORY MATERIALS SHALL NOT CONTAIN ANY DEBRIS, WASTE, OR FROZEN MATERIALS, AND SHALL CONTAIN LESS THAN TWO (2) PERCENT ORGANIC MATERIALS BY WEIGHT.
   C. ALL PROPOSED FILL MATERIALS SHOULD BE APPROVED BY THE GEOTECHNICAL ENGINEER PRIOR TO PLACEMENT AS CONTROLLED FILL. NO ROCKS OVER 12 INCHES ARE TO BE PLACED BACK IN GENERAL EXCAVATION. NO ROCKS OVER 4 INCHES ARE TO BE PLACED WITH ONE FOOT OF ANY PIPE OR CONDUIT.
   D. SATISFACTORY MATERIALS BROUGHT ON SITE ARE TO BE OBTAINED FROM IBM APPROVED SUPPLIERS / SITES. IN THE EVENT THAT SATISFACTORY MATERIALS ARE NOT AVAILABLE FROM IBM APPROVED SUPPLIERS/SITES, THEN REPRESENTATIVE SAMPLES OF PROPOSED FILL MATERIALS SHALL BE SUBMITTED TO IBM BY THE CONTRACTOR A MINIMUM TWO (2) WEEKS PRIOR TO PLACEMENT OF THAT MATERIAL FOR COMPLETION OF THE NECESSARY LABORATORY TESTS.
   E. THE CONTRACTOR IS RESPONSIBLE OF MAINTAINING ADAQUATE MOISTURE CONTENT OF THE SOIL AND MAY HAVE TO PLACE TARPS OVER SOIL PILES DURING WET WEATHER TO ENSURE WORKABLITY OF THE FILL WHEN WEATHER IMPROVES.
3. FILL PLACEMENT:
   A. NEW FILL SHALL NOT BE PLACED ON SURFACES THAT ARE MUDDY OR FROZEN, OR HAVE NOT BEEN APPROVED BY TESTING AND/OR PROOF-ROLLING.
   B. ALL FILL MATERIAL COMPACTED BY HEAVY CONSTRUCTION EQUIPMENT SHALL BE PLACED IN MAXIMUM 12-INCH LOOSE LIFTS. ALL FILL MATERIAL COMPACTED BY HAND-OPERATED OR LIGHT CONSTRUCTION EQUIPMENT SHALL BE PLACE IN MAXIMUM 6-INCH LOOSE LIFTS.
   C. ALL FILL AREAS SHALL BE SUFFICIENTLY SLOPED AND PROPERLY COMPACTED WITH A SMOOTH DRUM ROLLER AT THE END OF EACH WORK DAY.
4. COMPACTION REQUIREMENTS:
   A. COMPACT SUBGRADE MATERIALS TO THE FOLLWING PERCENTAGES OF MAXIMUM LAB DENSITY AS DETERMINED BY ASTM D698.
      - ROADWAYS/DRIVEWAYS: 95%
      - GRASSED AREAS: 85%
      - OTHER AREAS: AS INDICATED BY THE ENGINEER.
   B. MAINTAIN OPTIMUM MOISTURE CONTENT OF BACKFILL MATERIALS, WITHIN THE RANGE OF TWO PERCENTAGE POINTS, PLUS OR MINUS, TO ATTAIN REQUIRED COMPACTION DENSITY.
   C. FIELD DENSITY TESTS SHALL BE PERFORMED IN ACCORDANCE WITH ASTM D2922 (NUCLEAR METHOD). A MINIMUM OF THREE (3) TESTS SHALL BE PERFORMED FOR EACH LIFT OF FILL PLACED, OR A MINIMUM OF EVERY 2,500 SQUARE FEE OF FILL PLACED, WHICHEVER IS GREATER.
   D. IF TESTS INDICATE WORK DOES NOT MEET THE SPECIFIED REQUIREMENTS, FILL MATERIAL SHALL BE REMOVED, REPLACED AND RETESTED UNTIL COMPLIANCE IS ACHIEVED AT NO ADDITIONAL COST TO THE OWNER.
   E. ALL COMPACTED FILL SHALL BE TESTED AND APPROVED BY THE GEOTECHNICAL ENGINEER.
5. TOPSOIL REQUIREMENTS:
   A. TOPSOIL: ON SITE STOCKPILED MATERIAL APPROVED BY THE ENGINEER OR IMPORTED MATERIAL FREE OF STONES LARGER THAN ¾ INCH IN SIZE, STICKS AND OTHER DEBRIS, CAPABLE OF SUSTAINING VIGOROUS PLANT GROWTH WITH A PH VALUE BETWEEN 5.4 AND 7.0.
   B. PLACE TOPSOIL IN AREAS WHERE SEEDING, SODDING, AND PLANTING IS REQUIRED TO THE INDICATED DEPTH. PLACE TOPSOIL DURING DRY WEATHER.
      1. PROVIDE COMPACTED TOPSOIL DEPTH AS NOTED BELOW IN AREAS TO RECEIVE THE FOLLOWING TREATMENT:
         A. SEEDED GRASS: 6 INCHES.
         B. SOD: 4 INCHES.
         C. SHRUB BEDS: 18 INCHES.
         D. FLOWER BEDS: 12 INCHES.
         E. PLANTER BOXES: 12 INCHES MINIMUM OR TO WITHIN 3 INCHES OF BOX RIM.
   C. FINE GRADE TOPSOIL ELIMINATING ROUGH, HIGH OR LOW AREAS. MAINTAIN PROFILES AND CONTOUR OF SUBGRADE. ALL SLOPES SHALL BE SMOOTH AND CONTINUOUS. THE GRADE CHANGES SHOULD ALLOW A LANDSCAPER TO ADAQUATELY MOW THE LAWN AFTERWARD WITHOUT SCALPING OR BOUNCING.
   D. REMOVE ROOTS, WEEDS, ROCKS AND FOREIGN MATERIAL WHILE SPREADING.
   E. MANUALLY SPREAD TOPSOIL CLOSE TO TREES, PLANTS, BUILDINGS, AND OTHER STRUCTURES IN ORDER TO PREVENT DAMAGE. TOPSOIL IS TO BE RAKED BY HAND OR BY MECHANICAL MEANS. ROCKS, ROOTS AND DEBRIS COLLECTED DURING RAKING ARE TO BE REMOVED AT THE END OF EACH WORK DAY. PILES OF STONES OR DEBRIS SHALL NOT BE ALLOWED TO ACCUMULATE IN THE FINISHED GRADE AREAS.
   F. LIGHTLY COMPACT PLACED TOPSOIL.
   G. REMOVE SURPLUS SUBSOIL AND TOPSOIL FROM SITE IF APPROVED BY OWNER.
   H. LEAVE STOCKPILE AREA AND SITE CLEAN AND RAKED, READY TO RECEIVE LANDSCAPING.
   I. CONTRACTOR SHALL MAINTAIN EROSION CONTROL MEASURES THROUGHOUT THE LIFE OF THE PROJECT. ADDITIONAL EROSION CONTROL MEASURES MAY BE NEEDED TO PROTECT THE FINISHED WORK FROM RAIN WASHOUT AND OTHER WEATHER RELATED EVENTS. THE CONTRACTOR SHALL EVALUATE THE WORK PRIOR TO EACH STORM EVENT TO DETERMINE THAT, BASED ON THE FORECAST, THERE IS ADAQUATE PROTECTION. HAYBALES, HAY MATS AND OTHER MEASURES MAY BE NEEDED TO MINIMIZE EITHER RUNON OR RUNOFF.

SEEDING GENERAL NOTES:

ALL SEEDING SHALL BE PERFORMED IN GENERAL ACCORDANCE WITH NYSDOT STANDARD SPECIFICATIONS, SECTION 600 AND 700, LATEST ADDITION.

1. DEFINITIONS
   A. WEEDS: ANY PLANT NOT GRASS WHICH INCLUDES DANDELION, JIMSONWEED, QUACKGRASS, HORSETAIL, MORNING GLORY, RUSH GRASS, MUSTARD, LAMBSQUARTER, CHICKWEED, CRESS, CRABGRASS, CANADIAN THISTLE, NUTGRASS, POISON OAK, BLACKBERRY, TANSY RAGWORT, BERMUDA GRASS, JOHNSON GRASS, POISON IVY, NUT SEDGE, NIMBLE WILL, BINDWEED, BENT GRASS, WILD GARLIC, PERENNIAL SORREL, AND BROME GRASS.
   B. MULCHING MATERIAL: OAT OR WHEAT STRAW, FREE FROM WEEDS AND SEEDS, FOREIGN MATTER DETRIMENTAL TO PLANT LIFE, AND DRY. HAY OR CHOPPED CORNSTALKS ARE NOT ACCEPTABLE
   C. FERTILIZER: FS O_F_241, TYPE I, GRADE A; RECOMMENDED FOR GRASS, WITH FIFTY PERCENT (50%) OF THE ELEMENTS DERIVED FROM ORGANIC SOURCES; OF PROPORTION NECESSARY TO ELIMINATE ANY DEFICIENCIES OF TOPSOIL TO THE FOLLOWING PROPORTIONS: NITROGEN TEN PERCENT (10%), PHOSPHORIC ACID TEN PERCENT (10%), SOLUBLE POTASH TEN PERCENT (10%). THE CONTRACTOR SHOULD PLAN ON AT LEAST TWO APPLICATIONS OF FERTILIZER. ONE A STARTER FERTILIZER AND THE OTHER TO PROVIDE NITROGEN FOR THE QUICKLY GERMINATING GRASS.
2. GRASS SEEDING AND SEEDING RESTORATION MIXTURES

RESTORATION CONDITION	TOP SOIL	LIME	BASIC FERTILIZER	STARTER FERTILIZER	SEED MIX & SOWING RATE
TEMPORARY COVER	N/A	100#/1,000 SQ. FT.	N/A	10-6-4@ 40# PER 1,000 SQ. FT.	100% ANNUAL RYEGRASS SOW1# PER 1,000 SQ. FT. MARCH THRU MAY/AUGUST THRU SEPTEMBER
LAWNS (USE HAY MULCH)	YES	4 TONS/ACRE	10-20-20 1,000# PER/ACRE	10-6-4@ 40# 1,000 SQ. FT.	20% KENTUCKY BLUE GRASS (POA PRATENSIS) 60% TALL FESCUE (FESTUCA ARUNDINACEA) 20% PERENNIAL RYEGRASS (LOLIUM PERENNE) SOW 6# PER 1,000 SQ. YDS. MARCH THRU MAY/AUGUST THRU SEPTEMBER.
BANKS STEEPER THAN OR EQUAL TO 3 TO 1 (USE HAY MAT FOR SLOPE PROTECTION)	YES	4 TONS/ACRE	NO	12-18-10@ 18# PER 1,000 SQ. FT. OR 18-24-10 @20# PER 5,000 SQ. FT.	60% PENNLAWN RED FESCUE 40% PERENNIAL RYEGRASS SOW 9# PER 1,000 SQ. YDS MARCH THRU MAY/AUGUST THRU SEPTEMBER

3. FERTILIZING
   A. APPLY PULVERIZED AGRICULTURAL LIMESTONE/DOLOMITE AT A RATE SPECIFIED ABOVE PER ACRE. THE MIXTURE IS TO PROVIDE MAGNESIUM FOR THE NEW GRASS.
   B. APPLY FERTILIZER IN ACCORDANCE WITH MANUFACTURER'S INSTRUCTIONS. BOTH A STARTER AND MAINTENANCE APPLICATION OF FERTILIZER WILL BE APPLIED TO ENSURE NITROGEN TO THE NEW GRASS.
   C. APPLY AFTER SMOOTH RAKING OF TOPSOIL AND PRIOR TO ROLLER COMPACTION.
   D. DO NOT APPLY FERTILIZER AT SAME TIME OR WITH SAME MACHINE AS WILL BE USED TO APPLY SEED.
   E. MIX FERTILIZER AND LIMESTONE THOROUGHLY INTO UPPER FOUR INCHES OF TOPSOIL.
   F. LIGHTLY WATER TO AID THE DISSIPATION OF FERTILIZER.
   G. THE CONTRACTOR IS TO PROVIDE CALCULATIONS FOR AREA AND AMOUNTS OF FERTILIZER PRIOR TO ANY APPLICATION AND PROVIDE IBM AND THE CONSTRUCTION MANAGER WITH THE ESTIMATE OF MATERIAL TO BE APPLIED FOR THE GRASS OR LAWN.
4. SEEDING PROCEDURES
   A. APPLY SEED AT THE RATES LISTED ABOVE, EVENLY IN TWO INTERSECTING DIRECTIONS. RAKE IN LIGHTLY TO ACHIEVE GOOD SEED CONTACT WITH SOIL.
   B. DO NOT SEED AREAS IN EXCESS OF THAT WHICH CAN BE MULCHED ON SAME DAY.
   C. DO NOT SOW IMMEDIATELY FOLLOWING RAIN, WHEN GROUND IS TOO DRY, OR DURING WINDY PERIODS.
   D. IMMEDIATELY FOLLOWING SEEDING AND COMPACTING, APPLY MULCH (OAT OR WHEAT STRAW) AT A RATE OF 3 TONS PER ACRE. MAINTAIN CLEAR OF SHRUBS AND TREES.
   E. APPLY WATER WITH A FINE SPRAY IMMEDIATELY AFTER EACH AREA HAS BEEN MULCHED. SATURATE TOP FOUR INCHES OF SOIL.
   F. IF THE CONTRACTOR ELECTS TO USE HYDROSEEDING IT MUST BE APPROVED BY IBM. HAY MULCH WILL STILL HAVE TO BE USED ON HYDROSEED AREAS TO SHADE AND STABILIZE THE SOIL FROM RAIN IMPACT EROSION.
   G. IF AFTER TWO WEEKS THE GRASS SEED HAS NOT SPROUTED IT IS CONSIDERED NOT VIABLE AND MUST BE RESEEDED.
5. TEMPORARY SEEDING
   A. TEMPORARY SEEDING SHALL BE DONE IN AREAS WHERE NO ACTIVE WORK WILL BE PERFORMED FOR 20 DAYS OR MORE. ANY DISTURBED AREA ON WHICH ACTIVITY HAS CEASED FOR MORE THAN 20 DAYS MUST BE SEEDED AND MULCHED IMMEDIATELY.
   B. DURING NONGERMINATING PERIODS, ONLY MULCH SHOULD BE APPLIED AT THE RECOMMENDED RATES.
   C. DISTURBED AREAS WHICH ARE NOT AT FINISHED GRADE AND WHICH WILL BE REDISTURBED WITHIN ONE (1) YEAR SHALL BE SEEDED AND MULCHED WITH A TEMPORARY SEED MIXTURE.
   D. DISTURBED AREAS WHICH ARE EITHER AT FINISHED GRADE OR WILL NOT BE DISTURBED AGAIN WITHIN ONE (1) YEAR SHALL BE SEEDED WITH THE INDICATED PERMANENT SEED MIXTURE AND MULCHED.
   E. TEMPORARY SEEDING STEPS:
      - APPLY AGRICULTURAL LIMESTONE OR HYDRATED LIME AT A RATE OF ONE HUNDRED POUNDS PER 1000/S.F.
      - APPLY STARTER FERTILIZER AT THE APPLICATION RATE OF FORTY POUNDS PER 1000/S.F.
      - WORK THE LIMESTONE AND FERTILIZER INTO THE SOIL TO DEPTH OF THREE INCHES.
      - APPLY MULCH AT A RATE OF THREE TONS PER ACRE.
6. SEEDING MAINTENANCE
   A. THE CONTRACTOR SHALL MAINTAIN SEEDED AREAS IMMEDIATELY AFTER PLACEMENT UNTIL GRASS IS WELL ESTABLISHED AND EXHIBITS A VIGOROUS GROWING CONDITION.
      - MOW GRASS AT REGULAR INTERVALS PRIOR TO FINAL COMPLETION TO MAINTAIN A MAXIMUM HEIGHT OF FOUR INCHES IN LAWN AREAS. DO NOT CUT MORE THAN 1/3 OF GRASS BLADE AT ANY ONE MOWING. NEVER CUT SHORTER THAN 2 ½ INCHES.
      - NEATLY TRIM EDGES AND HAND CLIP WHERE NECESSARY, IN LAWN AREAS.
      - IMMEDIATELY REMOVE CLIPPINGS AFTER MOWING AND TRIMMING.
      - WATER DAILY TO PREVENT GRASS AND SOIL FROM DRYING OUT.
      - ROLL SURFACE TO REMOVE MINOR DEPRESSIONS OR IRREGULARITIES.
      - CONTROL GROWTH OF WEEDS. APPLY SELECTIVE HERBICIDES IN ACCORDANCE WITH
      - MANUFACTURER'S INSTRUCTIONS. REMEDY DAMAGE RESULTING FROM IMPROPER USE OF
      - HERBICIDES.
      - IMMEDIATELY RESEED AND MULCH AREAS WHICH SHOW BARE SPOTS OR ERODED AREAS.
      - PROTECT SEEDED AREAS WITH WARNING SIGNS DURING MAINTENANCE PERIOD.
      - LIMIT TRAFFIC (PEDESTRIAN AND LIGHT EQUIPMENT) ON FINISH LAWN OR SEEDED AREAS.
   B. THE CONTRACTOR SHALL REPLACE TOPSOIL AT ALL ERODED AREAS AND/OR WASHOUTS AND SHALL FILL AND RESEED WITH THE SAME SEED MIX, OR SHALL PLACE SOD OF THE SAME SEED MIX.
   C. THE CONTRACTOR SHALL BE RESPONSIBLE FOR REPLACING ALL FAILURES WHICH OCCUR WITHIN ONE YEAR OF FINAL COMPLETION AND ACCEPTANCE.
7. LAWN RESTORATION AFTER EROSION CONTROL REMOVAL
   A. ONCE THE NEW GRASS IS ESTABLISHED AND ACCEPTED BY IBM AND THE TOWN, THE EROSION CONTROL MEASURES (SILT FENCE, HAY BALES, AND STAKES) SHALL BE REMOVED AND DISPOSED OF. THE LAWN IN THE IMMEDIATE VICINITY OF THE EROSION CONTROLS SHALL BE RESTORED TO ITS ORIGINAL CONDITION, WORK REQUIRED WILL INCLUDE:
      - COLLAPSING AND FILLING AS NEEDED THE STAKE HOLES
      - RAKING OUT THE AREA WHERE THE EROSION CONTROLS WERE LOCATED
      - REMOVING, IF REQUIRED, EXCESS SILT CAPTURED BY THE EROSION CONTROLS
      - RESEEDING PER THE SEEDING INSTRUCTIONS LISTED ABOVE
   B. THE CONTRACTOR SHALL MAINTAIN THIS SEEDED AREA UNTIL THE GRASS IS WELL ESTABLISHED.

CONSTRUCTION SEQUENCE:

1. THE PROPOSED LIMITS OF DISTURBANCE SHALL BE CLEARLY MARKED IN THE FIELD, AS INDICATED, PRIOR TO THE START OF CONSTRUCTION ACTIVITIES.
2. INSTALL EROSION AND SEDIMENTATION CONTROL FEATURES AS INDICATED.
3. BEGIN INSTALLATION AND CONSTRUCTION OF ELECTRIC LINES AND CONCRETE PADS AS INDICATED.
4. INSTALL ELECTRICAL CONDUIT AS INDICATED. FOR ALL UTILITIES, THE QUANTITY OF EXCAVATION COMPLETED IN ONE (1) DAYS' TIME SHALL BE LIMITED TO THE AMOUNT OF PIPING WHICH CAN BE INSTALLED IN ONE (1) WORKING DAYS' TIME PERIOD. ALL EXCAVATED MATERIALS IN PAVED AREAS SHALL BE LOADED DIRECTLY INTO A DUMP TRUCK. DO NOT DEPOSIT MATERIAL ON PAVED SURFACES. ALL EXCAVATED MATERIALS IN GRASS AREAS SHALL BE DEPOSITED UPSLOPE OF THE TRENCH. AS SOON AS THE PIPE IS INSTALLED, PLACE DESIGNATED DIRECT COVER AND DESIGNATED TRENCH BACKFILL, AND RESTORE TRENCH TO NEAR ORIGINAL ELEVATION. BACKFILL TRENCH AT END OF EACH WORK DAY. INITIAL GRADE MAY BE SLIGHTLY LOWER THAN SURROUNDING ELEVATIONS TO MINIMIZE RUNOFF.
5. ONCE FINAL STABILIZATION IS ACHIEVED, REMOVE ALL TEMPORARY EROSION AND SEDIMENTATION CONTROL FEATURES. AREAS DISTURBED DURING REMOVAL OF THE CONTROLS SHALL BE STABILIZED IMMEDIATELY. AN AREA SHALL BE CONSIDERED TO HAVE ACHIEVED FINAL STABILIZATION WHEN IT HAS A MINIMUM OF 70% UNIFORM PERENNIAL VEGETATIVE COVER OR OTHER PERMANENT NON-VEGETATIVE COVER WITH A DENSITY SUFFICIENT TO RESIST AN ACCELERATED SURFACE EROSION AND SUBSURFACE CHARACTERISTICS SUFFICIENT TO RESIST SLIDING OR OTHER MOVEMENTS.

DIGITAL FILENAME: 1102200002
C.2-53

110220.0002

Hill & Bell Associates Engineers, L.L.C.
Engineers / Consultants
1047 N. Park Road
P.O. Box 6307
Reading, PA 19610-0307
Ph: 610-621-2000
Fax: 610-621-2001

READING
1047 North Park Road
PO Box 6307
Reading, PA 19610-0307
610.621.2000
LANCASTER
701 Creekside Lane
Lititz, PA 17543
717.568.2678
LEHIGH VALLEY
Roma Corporate Center, Suite 106
1605 N Cedar Crest Blvd
Allentown, PA 18104
610.849.9700
WEST CHESTER
101 East Evans Street
West Chester, PA 19380
610.621.2000

SSM
SPOTTS, STEVENS & MCCOY
Engineers and Consultants
ssmgroup.com

IBM

THOMAS J. WATSON
RESEARCH CENTER
YORKTOWN,N.Y.

FACILITIES DESIGN
COMPUTER GRAPHICS

FACILITIES ENGINEERING
REARRANGEMENT ENGINEERING
FACILITIES PLANNING

THIS DOCUMENT IS THE PROPERTY OF I.B.M. ITS USE IS AUTHORIZED ONLY FOR RESPONDING TO A REQUEST FOR QUOTATION OR FOR THE PERFORMANCE OF WORK FOR I.B.M. ALL QUOTATIONS MUST BE REFERRED TO THE I.B.M. PURCHASING DEPARTMENT.

NO.	DATE	DESCRIPTION	BY

REVISIONS

SHEET TITLE:
WATSON RESEARCH CENTER
BESS AND EVSE SITE

CIVIL
E & SC PLAN NOTES

DRAWN BY: KKS	SCALE: AS NOTED
CHECKED BY: JC	DATE: 08/30/22
PROJECT NO.	DRAWING NO. C.2-53
SHEET 4 OF 4	

Garden Lane Development

dimovski architecture PLLC

September 6, 2022

RECEIVED
PLANNING DEPARTMENT
SEP 6 - 2022
TOWN OF YORKTOWN

Chairman Richard Fon
Board Members
Town of Yorktown Planning Board
Albert A. Capellini Community & Cultural Center
1974 Commerce Street
Yorktown Heights, NY 10598

Re: New Multifamily Dwelling – Old Crompond Road
S/B/L: 35.08/1/27
Applicant: Dimovski Architecture PLLC
Owner: Garden Lane Development, LLC
Ref. No.: 2155

Dear Sir/Madam,

Transmitted herewith are eight copies of the following items for your consideration in relation to the above-referenced project prepared by Dimovski Architecture:

- Cover Letter
- Pre-Preliminary Application
- Owner Authorization
- Short EAF
- $100 Application Fee

Architectural Drawings:

- Survey
- Drawing G-001 — Title Sheet
- Drawing SP-1 — Site Plan/Zoning Data/Off-Street Parking
- Drawing A-100 — Basement Plan
- Drawing A-101 — First Floor Plan
- Drawing A-102 — Second Floor Plan
- Drawing A-200 — Elevations

The proposed two-story, 20 unit (average unit size is 873 SF) multi-family building is located on Garden Lane near Meadow Lane and Crompond Road in Cortlandt Manor on a 1.56-acre site. It is located in a R-3 district and currently, the property is vacant.

A similar application with 20 Units (average unit size was 880 SF), was submitted to the Board for this property circa 1989, called the "Hoffman Decision". As per our discussions with the town, our application mimics the 1989 application in relation to unit count, unit size, parking count, balconies, etc. We have incorporated today's Zoning requirements into the design (see drawing SP-1). Also, the proposed application is consistent with surrounding properties, both functionally and aesthetically.

The proposed two-story building (with Basement) is 86'-7" along Garden Lane. The First Floor is 11,667 SF and the Second Floor is 10,930 SF, for a total of 22,597 SF of habitable space. The Basement is 8,039 SF and contains Storage, Garbage and in-coming utilities. The First Floor will house one- and two-bedroom units, the Main Entry, Mailroom and a Community Rm for use by the building tenants. The Second Floor will house one- and two-bedroom units and two Offices for use by building tenants. A total of twelve one-bedroom and eight two-bedroom units are proposed. All required and visitor parking will be on site. Thirty parking spots for residence and fourteen additional parking spots for visitors are proposed.

We look forward to presenting our proposal to the Board. If you have any questions or concerns, please do not hesitate to contact me at (914) 747-3500.

Very truly yours,
DIMOVSKI ARCHITECTURE PLLC

Steve Dimovski

Steve Dimovski
Associate

cc: Vito DiMatteo
Yoomi Kim
Paulette Dimovski

TOWN OF YORKTOWN
PLANNING BOARD

Albert A. Capellini Community and Cultural Center, 1974 Commerce Street, Yorktown Heights, New York 10598, Phone (914) 962-6565, Fax (914) 962-3986

PRE-PRELIMINARY APPLICATION

Date 09/06/2022

1. **Tax Map Designation:** Section 35.08 Block 1 Lot 27

2. **Zone:** R-3 Acreage: 1.56

RECEIVED
PLANNING DEPARTMENT
SEP 6 - 2022
TOWN OF YORKTOWN

3. **Type of Development:** ☑ Site Plan ☐ Subdivision

4. **If subdividing, how many total lots are proposed?** _____

5. **A brief description of the proposed development:**

New 20 unit apartment units with paved parking areas.

6. **Applicant:**

Name	Steve Dimovski
Firm	Dimovski Architecture PLLC
Address	59 Kensico road
	Thornwood NY 10594
Phone	914-714-5607
Fax	N/A
Email	steve@dimovskiarchitecture.com

7. **Owner of Record:**

Name	Vito DiMatteo
Address	1437 Route 35
	South Salem, NY 10590
Phone	914-462-2557
Fax	N/A
Email	vitodimatteo4@gmail.com

8. **Designated contact person for this application:**

Name	Steve Dimovski
Fax #	N/A
Email	steve@dimovskiarchitecture.com

Applicant

SIGNATURE

Steve Dimovski
PRINT NAME

9/6/2022
DATE

Owner of Record

SIGNATURE

Vito DiMatteo
PRINT NAME

9-6-22
DATE

Note: By signing this document the owner of the subject property grants permission for Town Officials to enter the property for the purpose of reviewing this application.

Short Environmental Assessment Form
Part 1 - Project Information

RECEIVED
PLANNING DEPARTMENT
SEP 6 - 2022
TOWN OF YORKTOWN

Instructions for Completing

Part 1 – Project Information. The applicant or project sponsor is responsible for the completion of Part 1. Responses become part of the application for approval or funding, are subject to public review, and may be subject to further verification. Complete Part 1 based on information currently available. If additional research or investigation would be needed to fully respond to any item, please answer as thoroughly as possible based on current information.

Complete all items in Part 1. You may also provide any additional information which you believe will be needed by or useful to the lead agency; attach additional pages as necessary to supplement any item.

Part 1 – Project and Sponsor Information

Name of Action or Project:
Garden Lane Apartment

Project Location (describe, and attach a location map):
Garden Lane, approx. 200' North of Old Crompond road.

Brief Description of Proposed Action:
New Single building 20 apartment units and paved parking on vacant land.

Name of Applicant or Sponsor:	Telephone: 914-747-3500
Dimovski Architecture PLLC/ Steve Dimovski	E-Mail: steve@dimovskiarchitecture.com

Address:
59 Kensico road

City/PO:	State:	Zip Code:
Thornwood	NY	10594

	NO	YES
1. Does the proposed action only involve the legislative adoption of a plan, local law, ordinance, administrative rule, or regulation? If Yes, attach a narrative description of the intent of the proposed action and the environmental resources that may be affected in the municipality and proceed to Part 2. If no, continue to question 2.	☑	☐
2. Does the proposed action require a permit, approval or funding from any other government Agency? If Yes, list agency(s) name and permit or approval:	☑	☐

3. a. Total acreage of the site of the proposed action? 1.56 acres
   b. Total acreage to be physically disturbed? 0.9 acres
   c. Total acreage (project site and any contiguous properties) owned or controlled by the applicant or project sponsor? 1.56 acres

4. Check all land uses that occur on, are adjoining or near the proposed action:
   ☐ Urban ☐ Rural (non-agriculture) ☐ Industrial ☐ Commercial ☑ Residential (suburban)
   ☐ Forest ☐ Agriculture ☐ Aquatic ☐ Other(Specify):
   ☐ Parkland

	NO	YES	N/A
5. Is the proposed action,			
a. A permitted use under the zoning regulations?	☐	☑	☐
b. Consistent with the adopted comprehensive plan?	☐	☑	☐

	NO	YES
6. Is the proposed action consistent with the predominant character of the existing built or natural landscape?	☐	☑
7. Is the site of the proposed action located in, or does it adjoin, a state listed Critical Environmental Area? If Yes, identify: _____	☑	☐
8. a. Will the proposed action result in a substantial increase in traffic above present levels?	☑	☐
b. Are public transportation services available at or near the site of the proposed action?	☐	☑
c. Are any pedestrian accommodations or bicycle routes available on or near the site of the proposed action?	☑	☐
9. Does the proposed action meet or exceed the state energy code requirements? If the proposed action will exceed requirements, describe design features and technologies: _____	☐	☑
10. Will the proposed action connect to an existing public/private water supply? If No, describe method for providing potable water: _____	☐	☑
11. Will the proposed action connect to existing wastewater utilities? If No, describe method for providing wastewater treatment: _____	☐	☑
12. a. Does the project site contain, or is it substantially contiguous to, a building, archaeological site, or district which is listed on the National or State Register of Historic Places, or that has been determined by the Commissioner of the NYS Office of Parks, Recreation and Historic Preservation to be eligible for listing on the State Register of Historic Places?	☑	☐
b. Is the project site, or any portion of it, located in or adjacent to an area designated as sensitive for archaeological sites on the NY State Historic Preservation Office (SHPO) archaeological site inventory?	☑	☐
13. a. Does any portion of the site of the proposed action, or lands adjoining the proposed action, contain wetlands or other waterbodies regulated by a federal, state or local agency?	☑	☐
b. Would the proposed action physically alter, or encroach into, any existing wetland or waterbody? If Yes, identify the wetland or waterbody and extent of alterations in square feet or acres: _____	☑	☐

14. Identify the typical habitat types that occur on, or are likely to be found on the project site. Check all that apply:

☐ Shoreline ☐ Forest ☐ Agricultural/grasslands ☐ Early mid-successional

☐ Wetland ☐ Urban ☑ Suburban

	NO	YES
15. Does the site of the proposed action contain any species of animal, or associated habitats, listed by the State or Federal government as threatened or endangered?	☑	☐
16. Is the project site located in the 100-year flood plan?	☑	☐
17. Will the proposed action create storm water discharge, either from point or non-point sources? If Yes,	☐	☑
a. Will storm water discharges flow to adjacent properties?	☑	☐
b. Will storm water discharges be directed to established conveyance systems (runoff and storm drains)? If Yes, briefly describe: On Site Storm Chamber	☐	☑
18. Does the proposed action include construction or other activities that would result in the impoundment of water or other liquids (e.g., retention pond, waste lagoon, dam)? If Yes, explain the purpose and size of the impoundment:	☑	☐
19. Has the site of the proposed action or an adjoining property been the location of an active or closed solid waste management facility? If Yes, describe:	☑	☐
20. Has the site of the proposed action or an adjoining property been the subject of remediation (ongoing or completed) for hazardous waste? If Yes, describe:	☑	☐

I CERTIFY THAT THE INFORMATION PROVIDED ABOVE IS TRUE AND ACCURATE TO THE BEST OF MY KNOWLEDGE

Applicant/sponsor/name: Dimovski Architecture PLLC / Steve Dimovski Date: 9/6/2022

Signature: Title: APPLICANT

PRINT FORM

Agency Use Only [If applicable]

Project:

Date:

Short Environmental Assessment Form
Part 2 - Impact Assessment

Part 2 is to be completed by the Lead Agency.
Answer all of the following questions in Part 2 using the information contained in Part 1 and other materials submitted by the project sponsor or otherwise available to the reviewer. When answering the questions the reviewer should be guided by the concept "Have my responses been reasonable considering the scale and context of the proposed action?"

	No, or small impact may occur	Moderate to large impact may occur
1. Will the proposed action create a material conflict with an adopted land use plan or zoning regulations?	☐	☐
2. Will the proposed action result in a change in the use or intensity of use of land?	☐	☐
3. Will the proposed action impair the character or quality of the existing community?	☐	☐
4. Will the proposed action have an impact on the environmental characteristics that caused the establishment of a Critical Environmental Area (CEA)?	☐	☐
5. Will the proposed action result in an adverse change in the existing level of traffic or affect existing infrastructure for mass transit, biking or walkway?	☐	☐
6. Will the proposed action cause an increase in the use of energy and it fails to incorporate reasonably available energy conservation or renewable energy opportunities?	☐	☐
7. Will the proposed action impact existing: a. public / private water supplies?	☐	☐
b. public / private wastewater treatment utilities?	☐	☐
8. Will the proposed action impair the character or quality of important historic, archaeological, architectural or aesthetic resources?	☐	☐
9. Will the proposed action result in an adverse change to natural resources (e.g., wetlands, waterbodies, groundwater, air quality, flora and fauna)?	☐	☐
10. Will the proposed action result in an increase in the potential for erosion, flooding or drainage problems?	☐	☐
11. Will the proposed action create a hazard to environmental resources or human health?	☐	☐

PRINT FORM

Agency Use Only [If applicable]

Project:	
Date:	

Short Environmental Assessment Form
Part 3 Determination of Significance

For every question in Part 2 that was answered "moderate to large impact may occur", or if there is a need to explain why a particular element of the proposed action may or will not result in a significant adverse environmental impact, please complete Part 3. Part 3 should, in sufficient detail, identify the impact, including any measures or design elements that have been included by the project sponsor to avoid or reduce impacts. Part 3 should also explain how the lead agency determined that the impact may or will not be significant. Each potential impact should be assessed considering its setting, probability of occurring, duration, irreversibility, geographic scope and magnitude. Also consider the potential for short-term, long-term and cumulative impacts.

☐ Check this box if you have determined, based on the information and analysis above, and any supporting documentation, that the proposed action may result in one or more potentially large or significant adverse impacts and an environmental impact statement is required.

☐ Check this box if you have determined, based on the information and analysis above, and any supporting documentation, that the proposed action will not result in any significant adverse environmental impacts.

Name of Lead Agency	Date
Print or Type Name of Responsible Officer in Lead Agency	Title of Responsible Officer
Signature of Responsible Officer in Lead Agency	Signature of Preparer (if different from Responsible Officer)

PRINT FORM

dimovski architecture PLLC

RECEIVED
PLANNING DEPARTMENT
SEP 6 - 2022
TOWN OF YORKTOWN

Owner Authorization

Vito DiMatteo being duly sworn, deposes and says that (s)he resides at 1437 Route 35 in the Town/Village/City of South Salem in the County of Westchester in the State of NY that (s)he is the owner in fee of all that piece or parcel of land situated and lying in the Town of Yorktown with a street address of Old Crompond road and known and designated on Town Tax Maps as parcel id 35.08 – 1 - 27 and that (s)he makes or is authorizing Dimovski Architecture PLLC to make application for Garden Lane Apartments in his/her behalf and that the statement of facts contained in said application are true and that the work will be performed in the manner set forth in the application and in the plans and specifications filed herewith and in accordance with all applicable laws, ordinances and regulations. I further understand that the filing of this application is not a permit to commence construction.

Signature of Owner

Date: 9.6.22

Block 1, Lot 27 Town of Yorktown Tax Maps. Area=67,998 sq.ft.1.56 acres
Survey of plot situate in the Town of Yorktown, County of Westchester and State of New York, shown and designated as Lot Nos.1 thru 7, inclusive on a certain Map entitled "Amended Re-Subdivision", situate in the Town of Yorktown, Westchester County, New York, and filed in the Office of the County Clerk of Westchester County, Division of Land Records on November 21, 1925 in Volume 68 at Page 9.

RONALD PERSAUD, L.S.
LAND SURVEYOR
15 South Tenth Ave
MOUNT VERNON, N.Y. 10550
Tele : (914) 523-5808
Email: ronaldpersaud1510@gmail.com

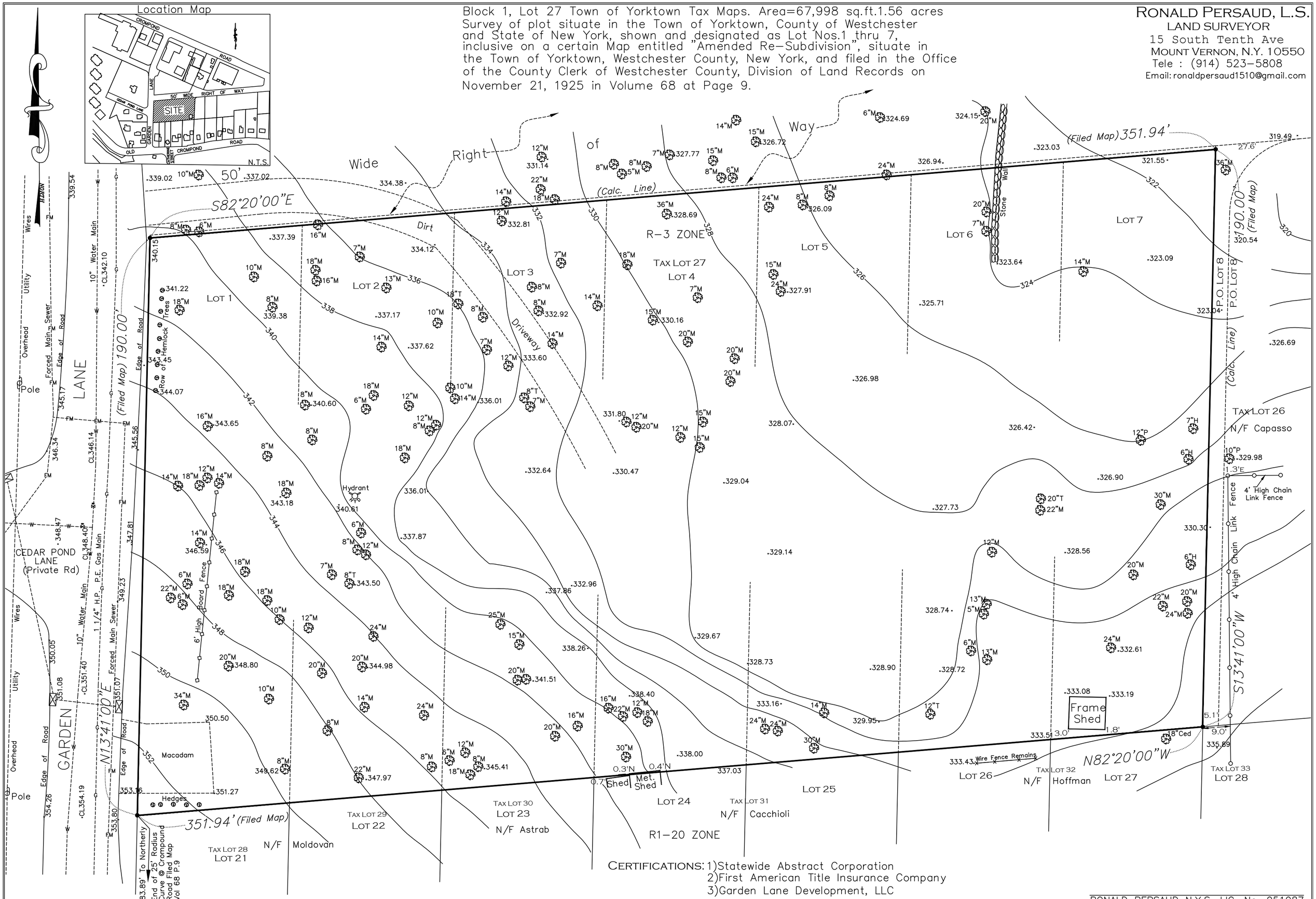

CERTIFICATIONS: 1)Statewide Abstract Corporation
2)First American Title Insurance Company
3)Garden Lane Development, LLC
4)DR Bank, ISAOA ATIMA

RONALD PERSAUD N.Y.S. LIC. No. 051087

All Elevations are based on NAVD 88 Datum. 356.00 Denotes Spot Elevations in Feet.

Unauthorized alteration or addition to this survey map is a violation of Section 7209 Subsection 2, of the New York State Education Law. No guarantee is implied by this map as to the existence or non-existence of any easements of record that would affect subject property, unless surveyor has been furnished a complete copy of the title report. Dimensions shown from structures to property lines are not intended to be used for construction of fences, structures or other improvements.

"Surveyed As In Possession" Surveyed: January 29, 2022 Scale: 1"=20' Map Drafted: February 9, 2022 INDEX: COO-122

GARDEN LANE APARTMENTS

OLD CROMPOND ROAD
CORTLAND MANOR, NY 10567

PROJECT SITE

VICINITY MAP

EXISTING SITE PLAN

SCALE: 1" = 30'

DRAWING LIST

ARCHITECTURAL

G-001	COVER SHEET
SP-1	SITE PLAN & ZONING ANALYSIS
A-100	BASEMENT FLOOR PLAN
A-101	FIRST FLOOR PLAN
A-102	SECOND FLOOR PLAN
A-200	EXTERIOR ELEVATIONS

Block 1, Lot 27 Town of Yorktown Tax Maps. Area=67,998 sq.ft.1.56 acres
Survey of plot situate in the Town of Yorktown, County of Westchester and State of New York, shown and designated as Lot Nos.1 thru 7, inclusive on a certain Map entitled "Amended Re-Subdivision", situate in the Town of Yorktown, Westchester County, New York, and filed in the Office of the County Clerk of Westchester County, Division of Land Records on November 21, 1925 in Volume 68 at Page 9.

All Elevations are based on NAVD 88 Datum. 356.00 **Denotes Spot Elevations in Feet.**
Unauthorized alteration or addition to this survey map is a violation of Section 7209 Subsection 2, of the New York State Education Law.
No guarantee is implied by this map as to the existence or non-existence of any easements of record that would affect subject property, unless surveyor has been furnished a complete copy of the title report.
Dimensions shown from structures to property lines are not intended to be used for construction of fences, structures or other improvements.

RONALD PERSAUD, L.S.
LAND SURVEYOR
15 South Tenth Ave
MOUNT VERNON, N.Y. 10550
Tele : (914) 523-5808
Email: ronaldpersaud1510@gmail.com

"Surveyed As In Possession"
Surveyed: January 29, 2022
Map Drafted: February 9, 2022

RONALD PERSAUD N.Y.S. LIC. No. 051087

GARDEN LANE APARTMENTS
OLD CROMPOND RD.
CORTLAND MANOR, N.Y. 10567

ARCHITECT
dimovski architecture PLLC
59 Kensico Road, Thornwood, NY 10594
(914) 747-3500 | (914) 747-3588 fax
www.dimovskiarchitecture.com

NO.	REVISION/ISSUE	DATE
1	PLANNING BOARD	9/06/2022

SEAL

PROJECT
GARDEN LANE APARTMENTS
OLD CROMPOND RD.
CORTLAND MANOR, N.Y. 10567

DATE:	JULY 01, 2022
PROJECT NO:	DA 2155
DRAWN BY:	YK
CHECKED BY:	PD/SGD
SCALE:	AS NOTED

DRAWING TITLE
COVER SHEET

SHEET NO.
G-001

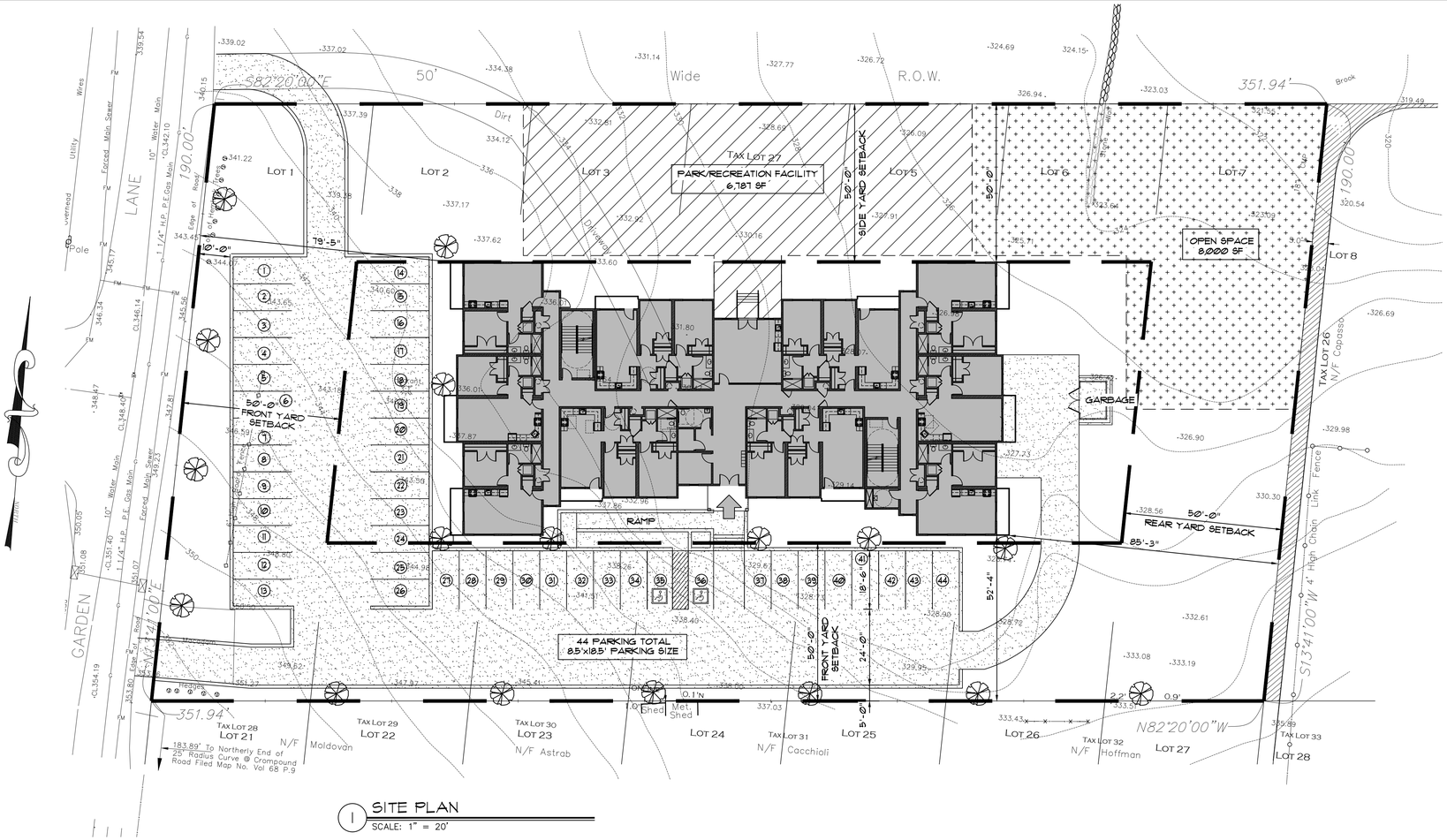

1 SITE PLAN
SCALE: 1" = 20'

ZONING DATA TABLE

SECTION: 35.08 BLOCK: 1 LOT: 27

ZONE: R-3

USE	REQUIRED	EXISTING	PROPOSED	VARIANCE
LOT AREA (SF)	3,630 SF	67,878 SF	NO CHANGE	
F.A.R., USABLE (WITH PUBLIC SEWERS)	0.20 for max 12 u./ac (a)	-	0.26 for 20 u./ac	(1) (2)
MIN. SITE AREA (ACRES)	-	-	NO CHANGE	
LOT WIDTH AT MAIN BUILDING LINE (FT)	-	184'	NO CHANGE	
LOT DEPTH (FT)	150'	352'	NO CHANGE	
FRONT YARD (FT)	50'	-	94'	
FRONT YARD (FT) CORNER LOT	50'	-	52'-4"	
SIDE YARD (FT)				
MAIN OR ACCESSORY BUILDING, MIN. EITHER SIDE	50'	-	50'	
TWO COMBINED	100'	-	-	
ACCESSORY BUILDING IF IN REAR YARD, MIN. EITHER SIDE	20'	-	-	
REAR YARD (FT)				
MAIN BUILDING	50'	-	85'-3"	
ACCESSORY BUILDING	-	-	-	
MAXIMUM HEIGHT (FT)				
MAIN BUILDING	40'	-	32'-10"	
ACCESSORY BUILDING OR STRUCTURE	-	-	-	
MIN. USABLE FLOOR AREA OF DWELLING UNIT (SF)	-	-	-	
MAX. BUILDING COVERAGE OF ACTUAL LOT AREA (ALL BUILDINGS)	20% / 13,575.6 SF	-	17.3% / 11,766 SF	
REQ'D OFF STREET PARKING SPACES PER DWELLING UNIT	1.5/DWELLING	-	44 (b)	
ROAT DRONTAGE (FT)	-	-	-	
VARIANCE(S) REQUIRED				
(1) - FAR - 0.20 IS REQ'D, HAS 0.26, THEREFORE A 0.06 FAR VARIANCE IS NEEDED.				
(2) - UNIT COUNTS - 18.72 UNITS ARE REQ'D, HAS 20 UNITS, THEREFORE A 1.28 UNITS VARIANCE IS NEEDED.				

(a) REQUIRED NUMBER OF APT. UNITS PER ACRE

67,878 SF/43,560 SF=1.56 ACRES

67,878 SF x 1.56 = 18.72 UNITS ALLOWED

PROPOSED NUMBER OF APT. UNITS

20 UNITS (20 UNITS ALLOWED BASED ON PREVIOUSLY APPROVED HOFFMAN DECISION. SEE ATTACHED.)

F.A.R. BREAKDOWN

(8) 1 BEDROOM UNITS = 750 SF x 8 = 6,000 SF
(4) 1 BEDROOM UNITS = 763 SF x 4 = 3,052 SF
(8) 2 BEDROOM UNITS = 1,052 SF x 8 = 8,416 SF
17,468 SF

TOTAL PROPOSED DWELLING UNITS F.A.R. = 20 UNITS @ 17,468 SF

AVERAGE F.A.R. PER DWELLING UNIT = 17,504 SF / 20 = 873.4 SF
(880 SF / UNIT ALLOWED BASED ON HOFFMAN DECISION.)

(b) PARKING REQUIREMENT

1.5 PARKING PER DWELLING UNIT

PROPOSED 20 DWELLING UNITS
1.5 x 20 = 30 PARKING

30 REQUIRED PARKING
14 GUEST PARKING
44 TOTAL PARKING PROVIDED

OPEN SPACE REQUIREMENT
300-21(C)(3)(f)

400 SF PER EACH DWELLING UNIT

PROPOSED 20 DWELLING UNITS
400 x 20 = 8,000 SF

PARK/RECREATIONAL FACILITIES REQUIREMENT
300-21(C)(3)(g)

10% OF THE SITE

67,878 x 0.1 = 6,787 SF

GARDEN LANE APARTMENTS

OLD CROMPOND RD.
CORTLAND MANOR, N.Y. 10567

ARCHITECT
dimovski architecture PLLC
59 Kensico Road, Thornwood, NY 10594
(914) 747-3500 | (914) 747-3588 fax
www.dimovskiarchitecture.com

NO.	REVISION/ISSUE	DATE
1	PLANNING BOARD	9/06/2022

SEAL

PROJECT
GARDEN LANE APARTMENTS
OLD CROMPOND RD.
CORTLAND MANOR, N.Y. 10567

DATE:	JULY 01, 2022
PROJECT NO:	DA 2155
DRAWN BY:	YK
CHECKED BY:	PD/SGD
SCALE:	AS NOTED

DRAWING TITLE
SITE PLAN & ZONING ANALYSIS

SHEET NO.
SP-1

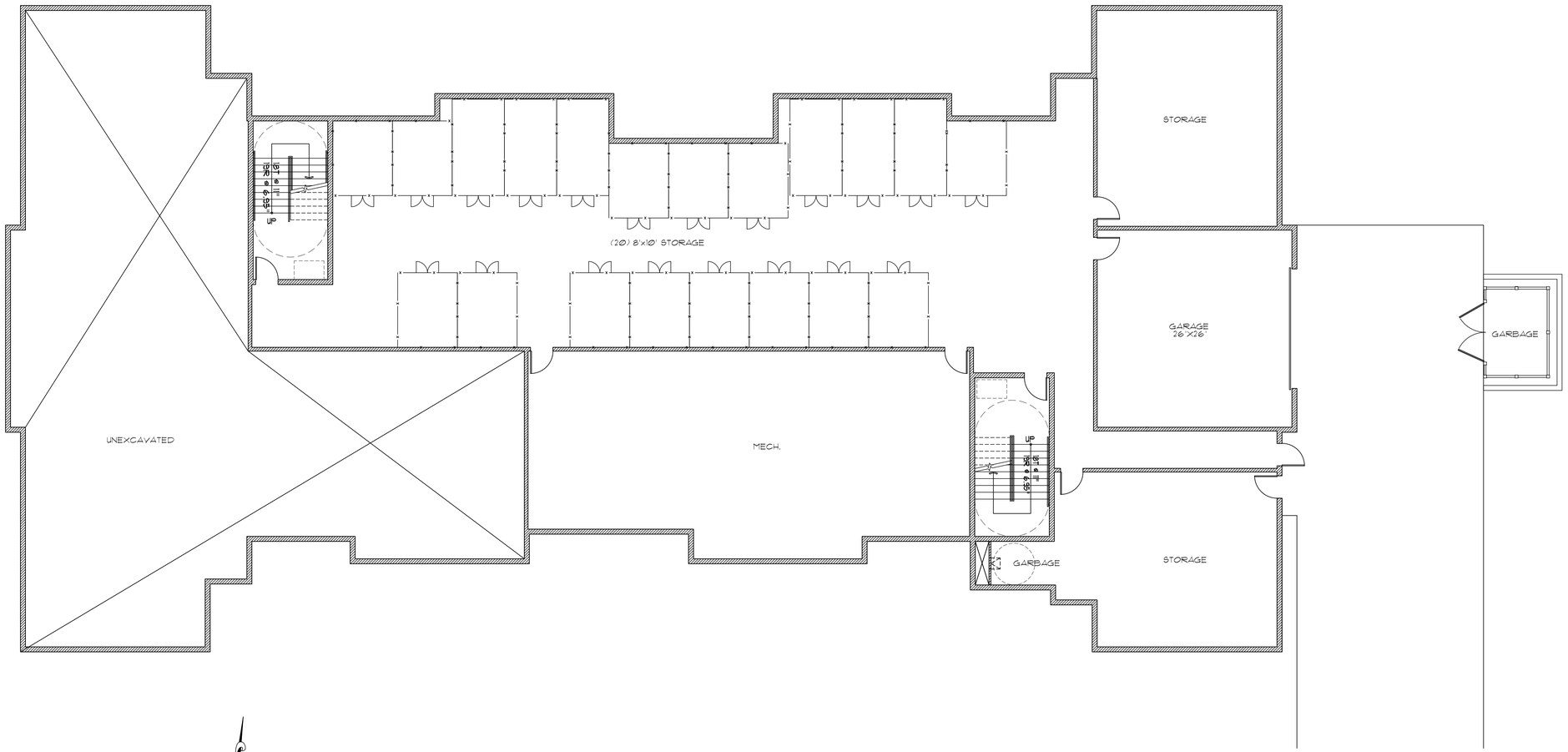

1 BASEMENT FLOOR PLAN
SCALE: 1/8" = 1'-0"

GARDEN LANE APARTMENTS

OLD CROMPOND RD.
CORTLAND MANOR, N.Y. 10567

ARCHITECT

dimovski architecture P.L.L.C.
59 Kensico Road, Thornwood, NY 10594
(914) 747-3500 | (914) 747-3588 fax
www.dimovskiarchitecture.com

NO.	REVISION/ISSUE	DATE
1	PLANNING BOARD	9/06/2022

SEAL

PROJECT

GARDEN LANE APARTMENTS

OLD CROMPOND RD.
CORTLAND MANOR, N.Y. 10567

DATE:	JULY 01, 2022
PROJECT NO:	DA 2155
DRAWN BY:	YK
CHECKED BY:	PD/SGD
SCALE:	AS NOTED

DRAWING TITLE

BASEMENT PLAN

SHEET NO.

A-100

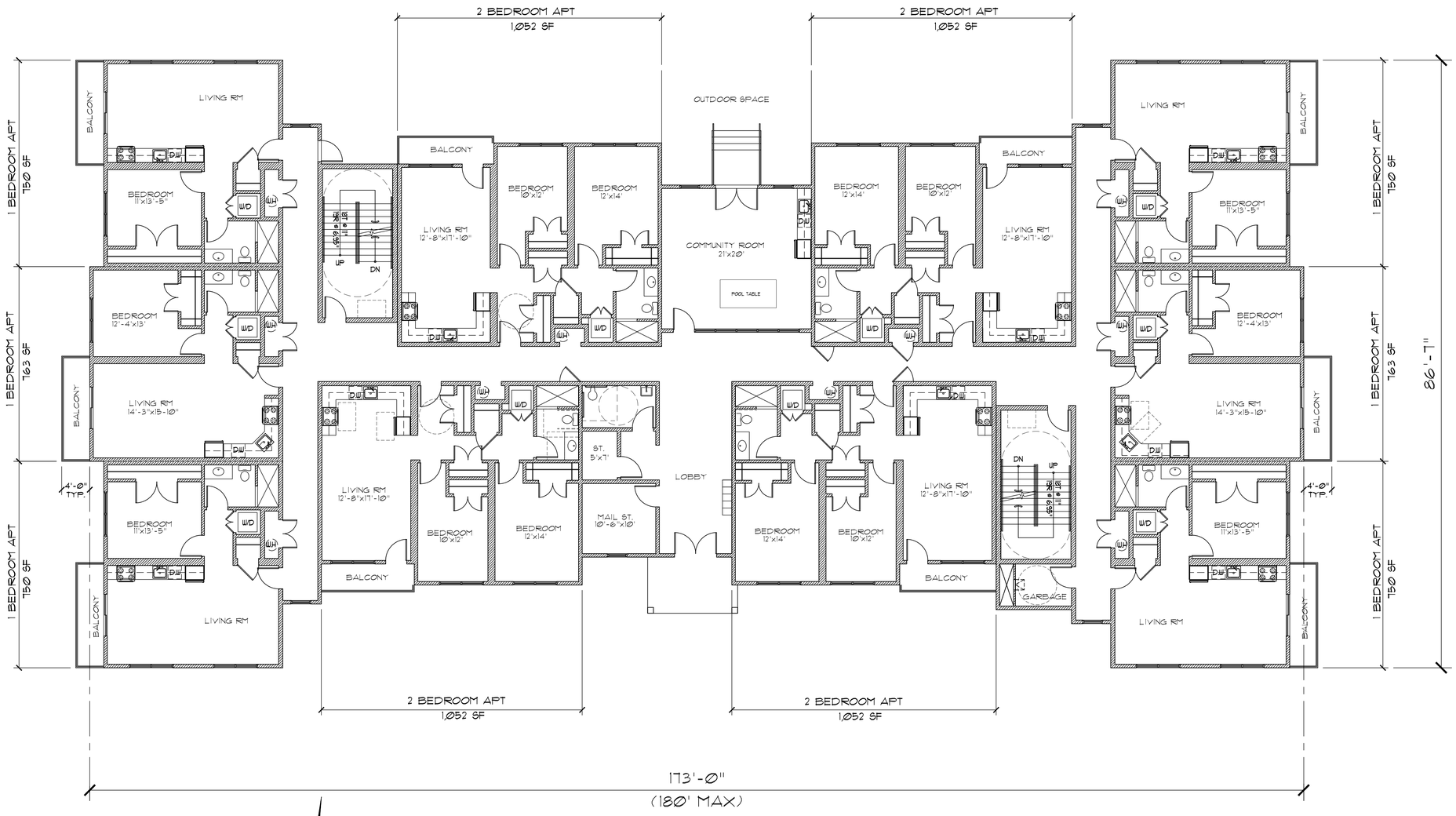

1 IST FLOOR PLAN
SCALE: 1/8" = 1'-0"

GARDEN LANE APARTMENTS

OLD CROMPOND RD.
CORTLAND MANOR, N.Y. 10567

ARCHITECT

dimovski architecture PLLC
59 Kensico Road, Thornwood, NY 10594
(914) 747-3500 | (914) 747-3588 fax
www.dimovskiarchitecture.com

NO.	REVISION/ISSUE	DATE
1	PLANNING BOARD	9/06/2022

SEAL

PROJECT

GARDEN LANE APARTMENTS

OLD CROMPOND RD.
CORTLAND MANOR, N.Y. 10567

DATE:	JULY 01, 2022
PROJECT NO:	DA 2155
DRAWN BY:	YK
CHECKED BY:	PD/SGD
SCALE:	AS NOTED

DRAWING TITLE

FIRST FLOOR PLAN

SHEET NO.

A-101

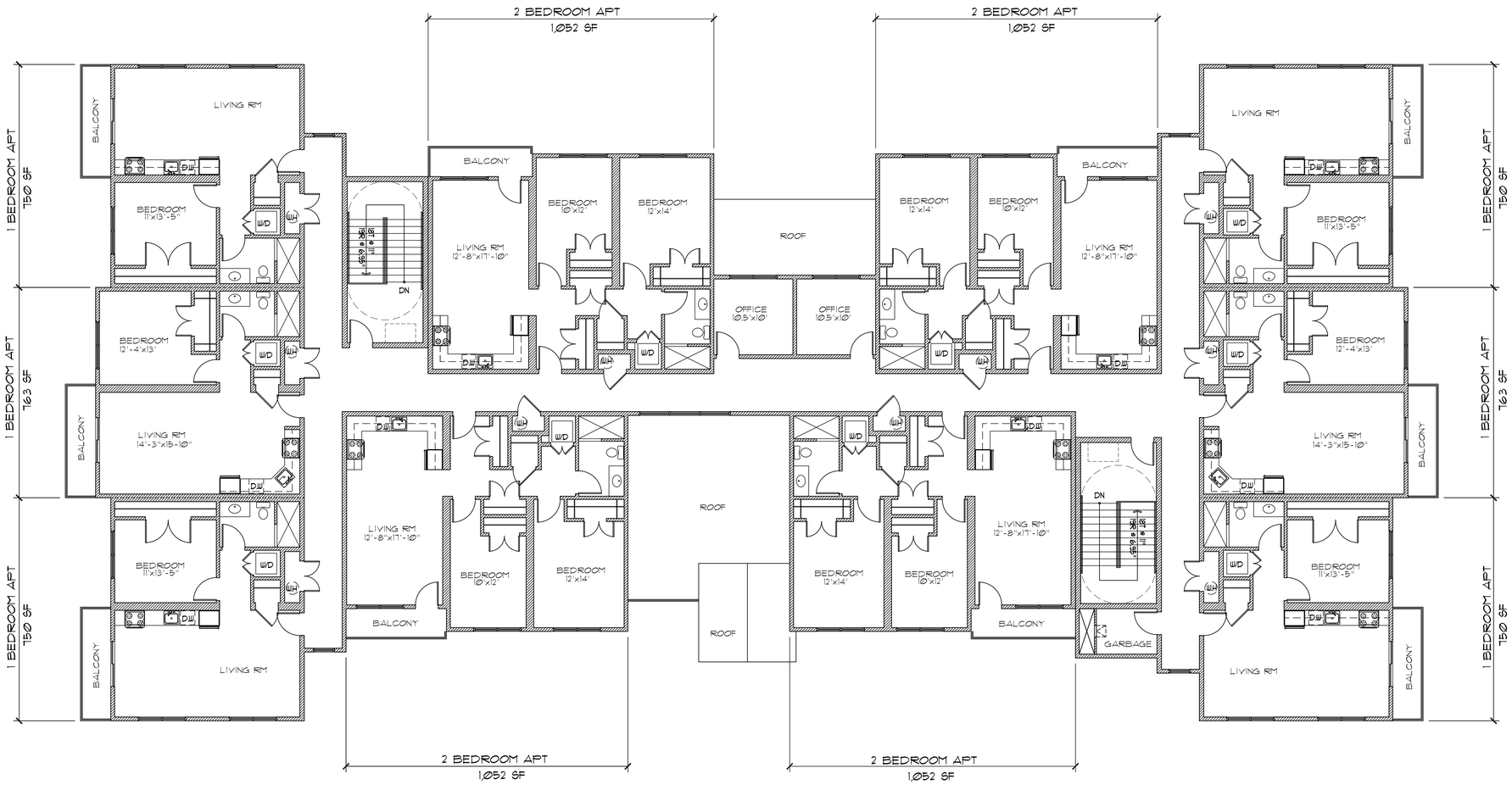

1 2ND FLOOR PLAN
SCALE: 1/8" = 1'-0"

GARDEN LANE APARTMENTS

OLD CROMPOND RD.
CORTLAND MANOR, N.Y. 10567

ARCHITECT

dimovski architecture PLLC
59 Kensico Road, Thornwood, NY 10594
(914) 747-3500 | (914) 747-3588 fax
www.dimovskiarchitecture.com

NO.	REVISION/ISSUE	DATE
1	PLANNING BOARD	9/06/2022

SEAL

PROJECT

GARDEN LANE APARTMENTS

OLD CROMPOND RD.
CORTLAND MANOR, N.Y. 10567

DATE:	JULY 01, 2022
PROJECT NO:	DA 2155
DRAWN BY:	YK
CHECKED BY:	PD/SGD
SCALE:	AS NOTED

DRAWING TITLE

SECOND FLOOR PLAN

SHEET NO.

A-102

1 FRONT ELEVATION (SOUTH ELEVATION)
SCALE: 1/8" = 1'-0"

2 REAR ELEVATION (NORTH ELEVATION)
SCALE: 1/8" = 1'-0"

3 RIGHT SIDE ELEVATION (EAST ELEVATION)
SCALE: 1/8" = 1'-0"

4 LEFT SIDE ELEVATION (WEST ELEVATION)
SCALE: 1/8" = 1'-0"

GARDEN LANE APARTMENTS

OLD CROMPOND RD.
CORTLAND MANOR, N.Y. 10567

ARCHITECT

dimovski architecture PLLC
59 Kensico Road, Thornwood, NY 10594
(914) 747-3500 | (914) 747-3588 fax
www.dimovskiarchitecture.com

NO.	REVISION/ISSUE	DATE
1	PLANNING BOARD	9/06/2022

SEAL

PROJECT

GARDEN LANE APARTMENTS

OLD CROMPOND RD.
CORTLAND MANOR, N.Y. 10567

DATE:	JULY 01, 2022
PROJECT NO:	DA 2155
DRAWN BY:	YK
CHECKED BY:	PD/SGD
SCALE:	AS NOTED

DRAWING TITLE

EXTERIOR ELEVATIONS

SHEET NO.

A-200

Hoffman File

Resolution adopted by the Town Board, Town of Yorktown at its meeting held on September 18th, 1990.

HOFFMAN DECISION

WHEREAS, an application has been made to rezone a certain parcel of land known as Section 3.08 Parcel 239 Lot 15 (more fully described in Appendix A) from R1-20 Single Family Residential to R-3 Multi-Family with a Density bonus to allow for a total of 20 units; and

WHEREAS, duly noticed public hearings have been held on 11-18-86, 8-15-89, 8-7-90 and 8-21-90; and

WHEREAS said request to rezone was sent for review and the following memoranda were received:

Planning Board/Planning Dept. dated 7/25/89 and 6/25/90

Westchester County Dept. of Planning dated 5/16/89, 6/6/90

Conservation Board dated and 6/15/89 and 7/27/90

Town Engineer dated 6/8/90; and

WHEREAS, public comment was duly taken and heard and the following submittals made part of the record:

Environmental Assessment Form

Preliminary sketch plan by Site Design Consultants dated 6-11-90;

and

WHEREAS, the Town Board has declared itself to be lead agency pursuant to 6 NYCRR Part 617 (SEQRA), and

WHEREAS, the instant application has been deemed to be an unlisted action; and

WHEREAS, an acceptable environmental assessment form has been completed and fully submitted;

be it hereby

RESOLVED, that the following findings of fact are made:

That the property sought to be rezoned is located on the east side of Garden Lane north of Old Crompond Road, in an area which since 1966 has been shown on the Town Plan for multi-family use. Pursuant to this policy, the Town Board rezoned a 4.3 acre site on the west side of Garden Lane from single family to multi-

family (R-3), permitting the construction of 40 co-op units on the property (Parkhill).

An existing small garden apartment project located at the intersection of Garden Lane and Old Crompond Road is also owned and managed by Mr. Hoffman.

The subject site is rectangular and its dimensions are 191 x 357 feet and it includes 1.558 acres. The site is bounded to the north by a 50 foot wide unimproved right-of-way and beyond, by Curry Honda and a Lumber Company; to the east by vacant lands owned by Scinicariello and Capasso; to the south by single family homes and to the west by Garden Lane. This road has been fully improved.

The site topography is level to rolling with slopes ranging from 0% to 15%. There are no wetlands on the site according to the town's environmental maps. The on-site soils were found very acceptable for the septic system proposed.

According to R-3 regulations the 1.6 acre site can be developed as follows:

For small units which will not exceed a total floor area ratio of 0.2, density can be 12 units/acre; i.e., a total of 19 units.

For larger units with a total floor area ratio of 0.215 a maximum density of 10 units is permitted; i.e., 16 units.

For large units with a total floor area ratio of 0.23 a maximum density of 8 units is permitted; i.e., 13 units.

A major policy issue which arises herein is the issue of public sewers. Town policy has been to approve multi-family districts only where public sewers are available. R-3 regulations permit half the density when this is not the case. The Town Board made an exception for Parkhill in recognition of the importance to provide relatively low-cost housing in an area planned for such use. The suitable soils were also considered, as well as the likelihood of public sewer availability in the future.

In view of the above this Board shall require the installation of dry sewers.

The applicant has proposed the construction of a 20 unit apartment complex on the site. (18 units as-of-right) under our R-3 designation and 2 affordable housing density units). The apartments are proposed to average approximately 880 sq. ft. Each apartment is to have a terrace or balcony overlooking a landscaped garden. The apartments are proposed to rent for approximately 850.00 to 950.00 dollars per month. The affordable apartments are expected to rent for 745.00 per month.

Based upon the foregoing proposal the project adequately addresses and furthers the Yorktown Affordable Housing policy.

WHEREFORE, based upon the foregoing, it is hereby

RESOLVED, that the rezoning will not have any adverse impact upon the environment and a declaration of non-significance is made pursuant to 6 NYCRR Part 617 (SEQRA), and it is

FURTHER RESOLVED, that the property known as Section 3.08 Parcel 239 Lot 15 as more fully described in Appendix A is rezoned to R-3, and be it

FURTHER RESOLVED, that an affordable housing density bonus is granted allowing for an additional 2 units to be rented at the rates set by Section 90-34.2 of the Yorktown Town Code; and be it

FURTHER RESOLVED, that rezoning is made subject to the installation of dry sewers and obtaining approval from the Westchester County Board of Health.

Town Clerk

cc: E. Hoffman
Planning Director
Town Engineer
Conservation Board

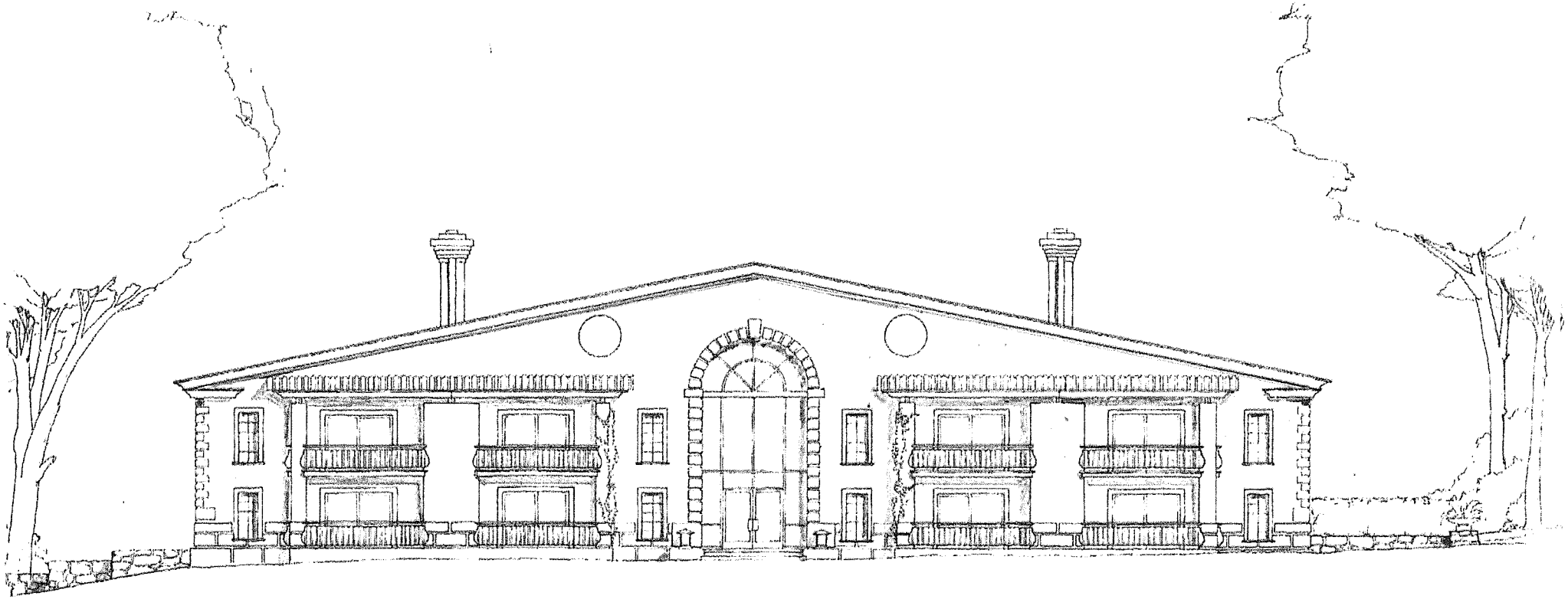

WEST ELEVATION

ALL REPRODUCTIONS
MUST BE WITH PERMISSION OF HCRTC

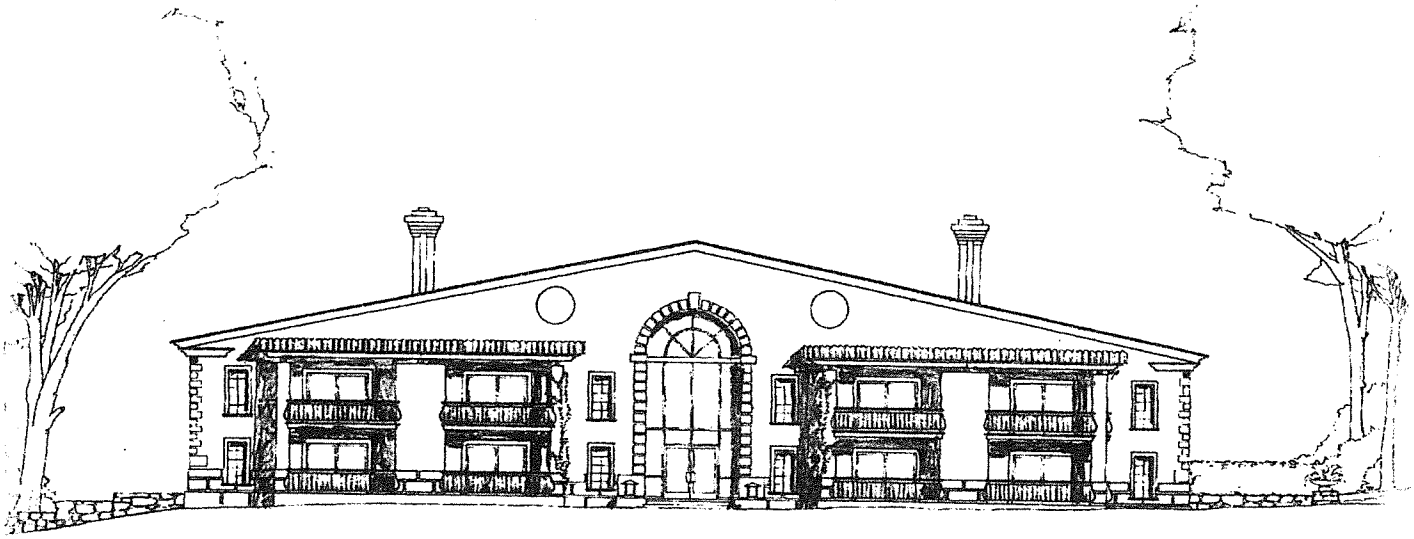

WEST ELEVATION

Scale 1/8" - 1'

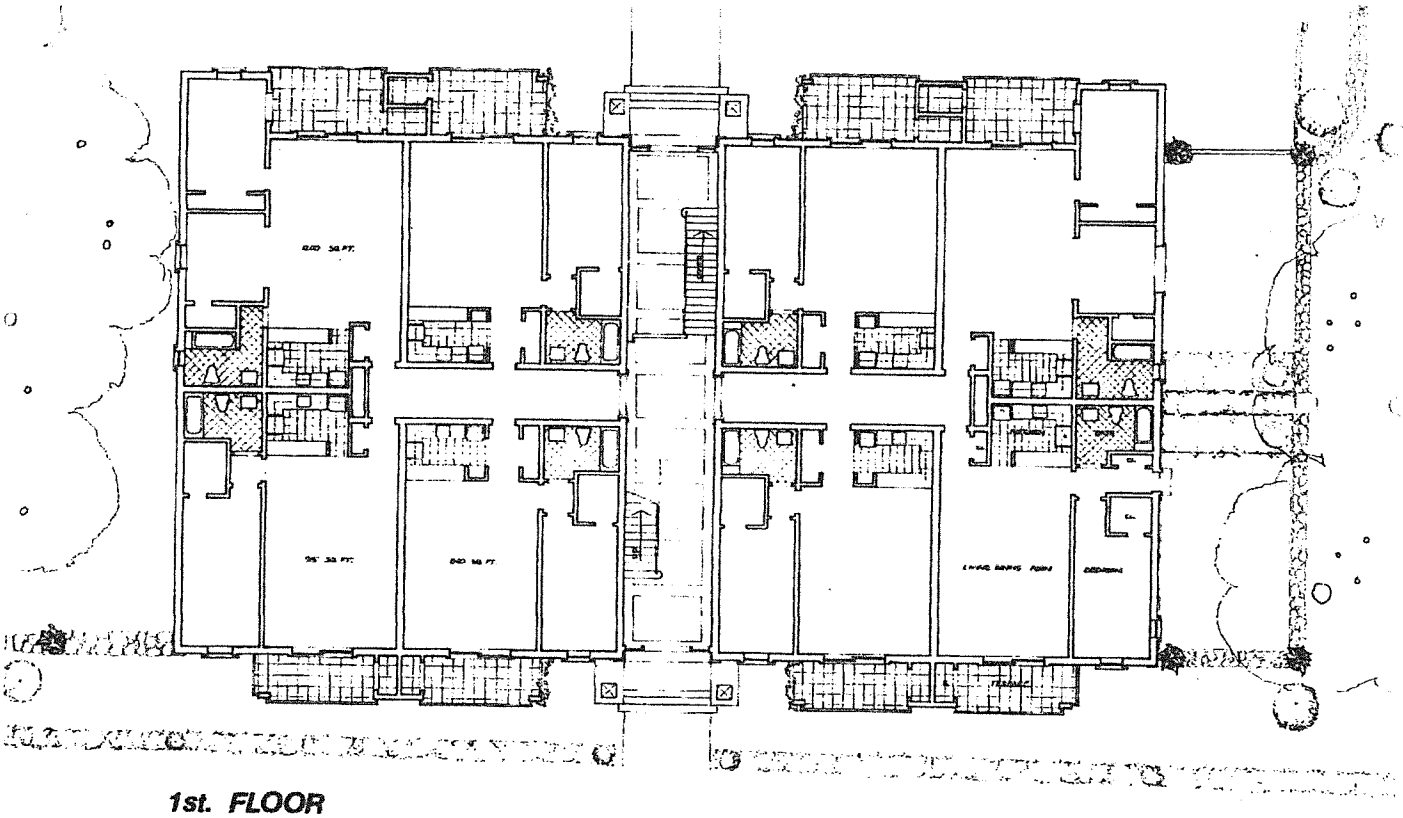

1st. FLOOR

Scale 1/8" - 1'

N

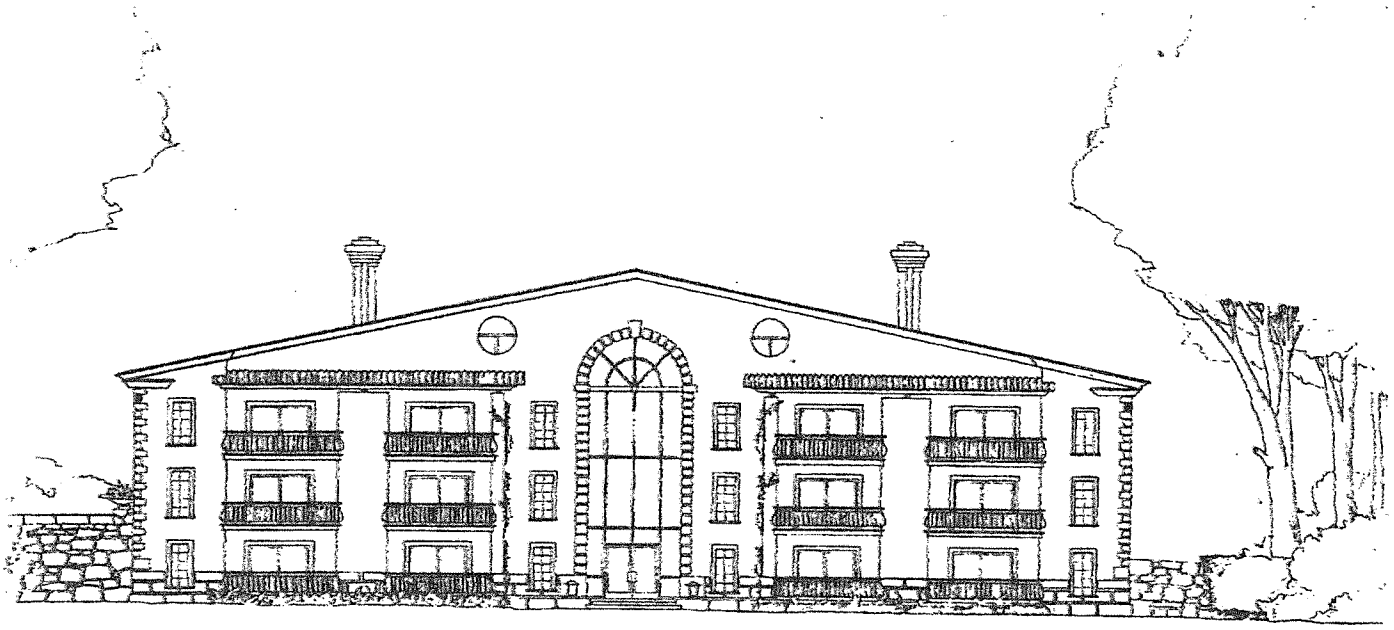

EAST ELEVATION

Scale 1/8" - 1'

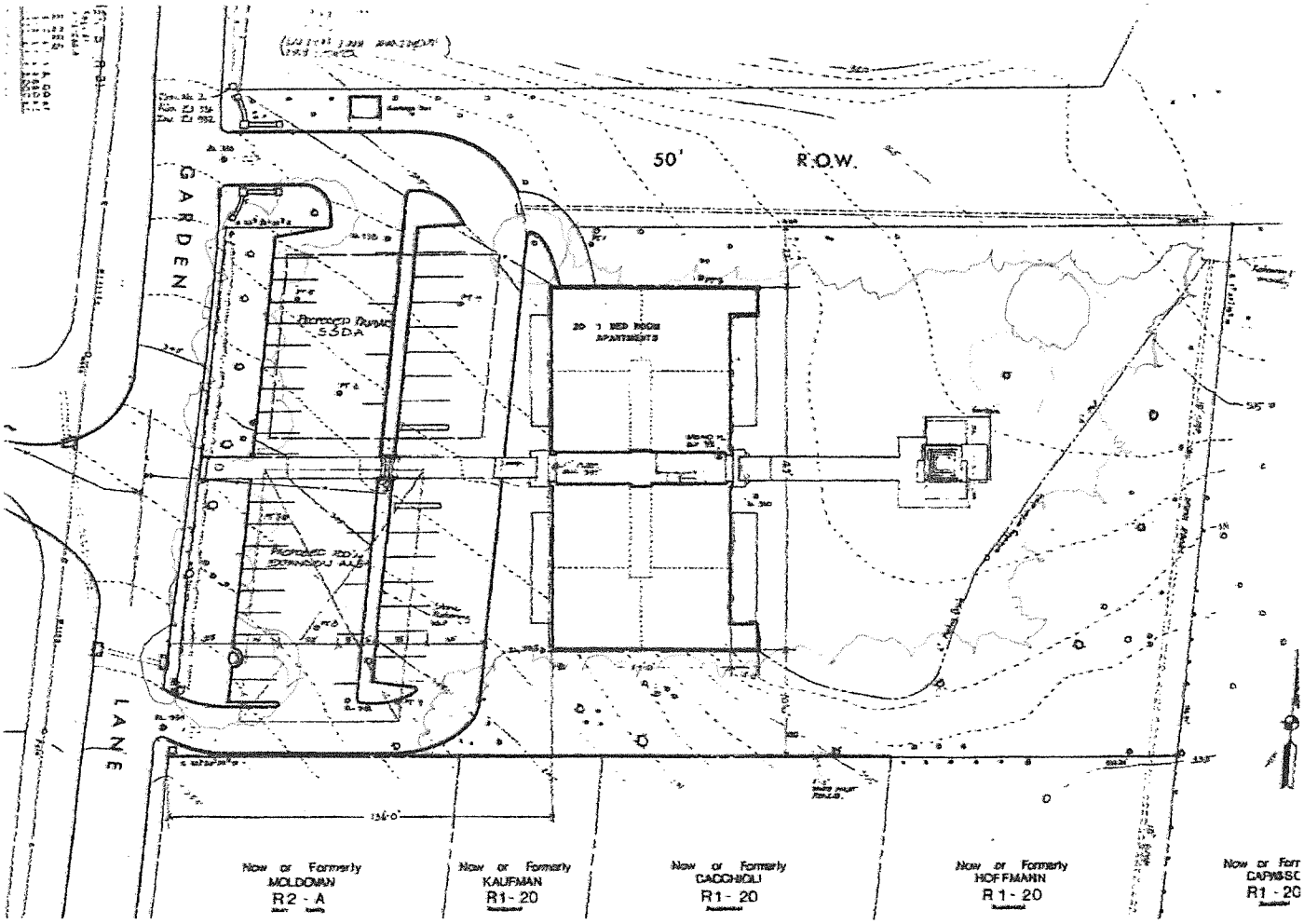

GARDEN LANE APARTMENTS

YORKTOWN NEW YORK USA

SCHEME 3

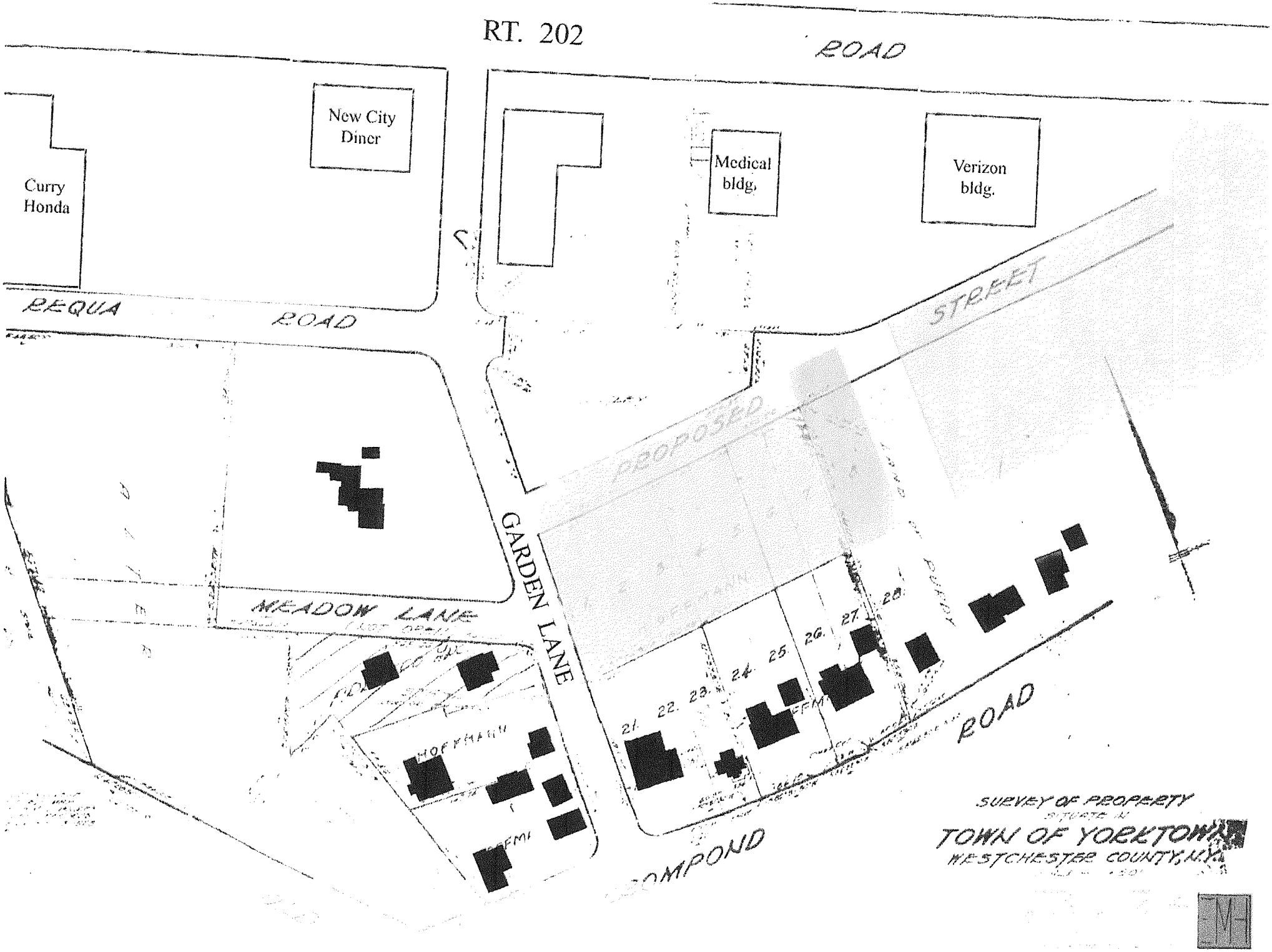
RT. 202
ROAD
New City Diner
Curry Honda
Medical bldg.
Verizon bldg.
REQUA ROAD
STREET
PROPOSED
GARDEN LANE
MEADOW LANE
HOFFMAN
21. 22. 23. 24. 25. 26. 27. 28.
ROAD
COMPOND
SURVEY OF PROPERTY
SITUATE IN
TOWN OF YORKTOWN
WESTCHESTER COUNTY, N.Y.

LOCATION MAP

D 1

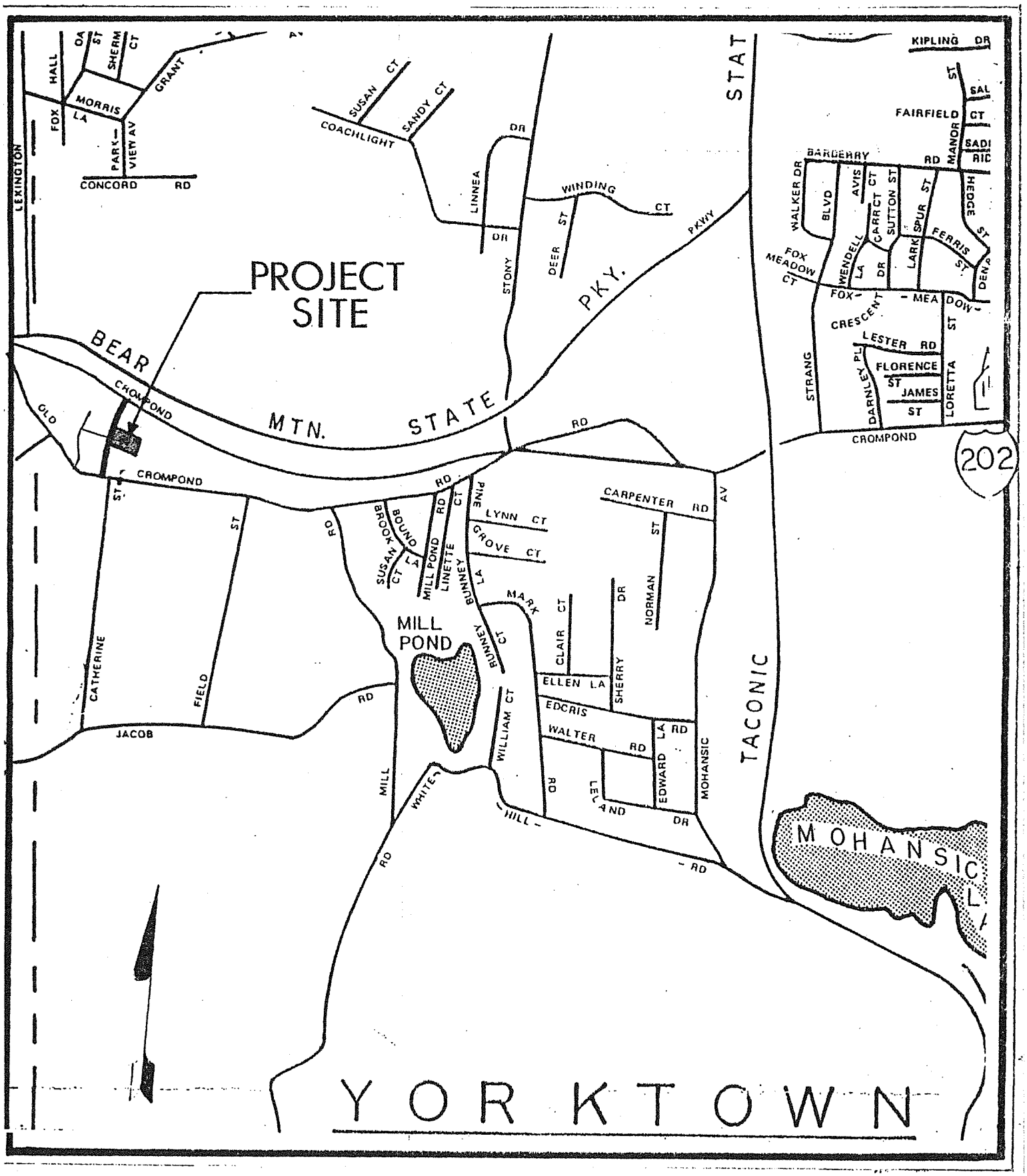

FULL ENVIRONMENTAL ASSESSMENT FORM.

Prepared for
Town Board of
Yorktown.

Nancy Elliott
Town Supervisor

Cover Sheet - Location Map

1. Table of Contents
2. Site Description
3. Present Site Map
4. Topography Map
5. Soils Map
6. Project Description
8. Proposal Diagram
9. Zoning and Planning Info.
10. Zoning Map 1/4 Radius
11. Septic System
12. Dry Sewer Line
13. Alternatives
15. 1/8" Plan and Elevation of Proposal
16. Septic System Diagrams

SITE DESCRIPTION:

The proposed Garden Lane Apartments, is located northwest of the center of Yorktown, on Garden Lane. The site is comprised of abutting lots #1 -#7 (Map #60 RO. Vol. 68, p.9.) Which are situated in a R1 -20 zone classification as indicated on the Town Development Plan. (D-1).

The total area is comprised of 1.56 arces including approx. 80 square feet of Town of Yorktown Regulated Wet Lands area. This 80 square feet is a retension pond for a storm drain outlet, from Old Crompond Rd. In general the site has a forested character, with a little less then 1/2 being open space, sloping from the southwest corner to the northeast corner. The open space is presently being used by Hoffmann construction, as a storage and service depot. This will all be eliminated and cleaned up by the proposed action. (D-2).

The predominant soil type is a medium to fine sandy loam (bank-run), which has good absorbtion characteristics. The soil covers approximately 50% of the site and is situated as to lend itself to a gravity flow septic system. Diagrams (D-3 & D-4).

18 Apartments

TITLE No.:

TOWN TAX MAP DATA:
Section 3.8 Parcel 239 Lot 1-7

18 APARTMENTS
15 (regular)
3 (affordable)

APARTMENT SIZE
10 × 900# = 9000
6 × 820# = 4920
2 × 550# = 1100

Net Area = 15020#

Far = 17
Max Far = .20
= 17,380#

Gross Building Area
= 16,900#

PARKING
Required @ 1.5 = 27
Provided = 28

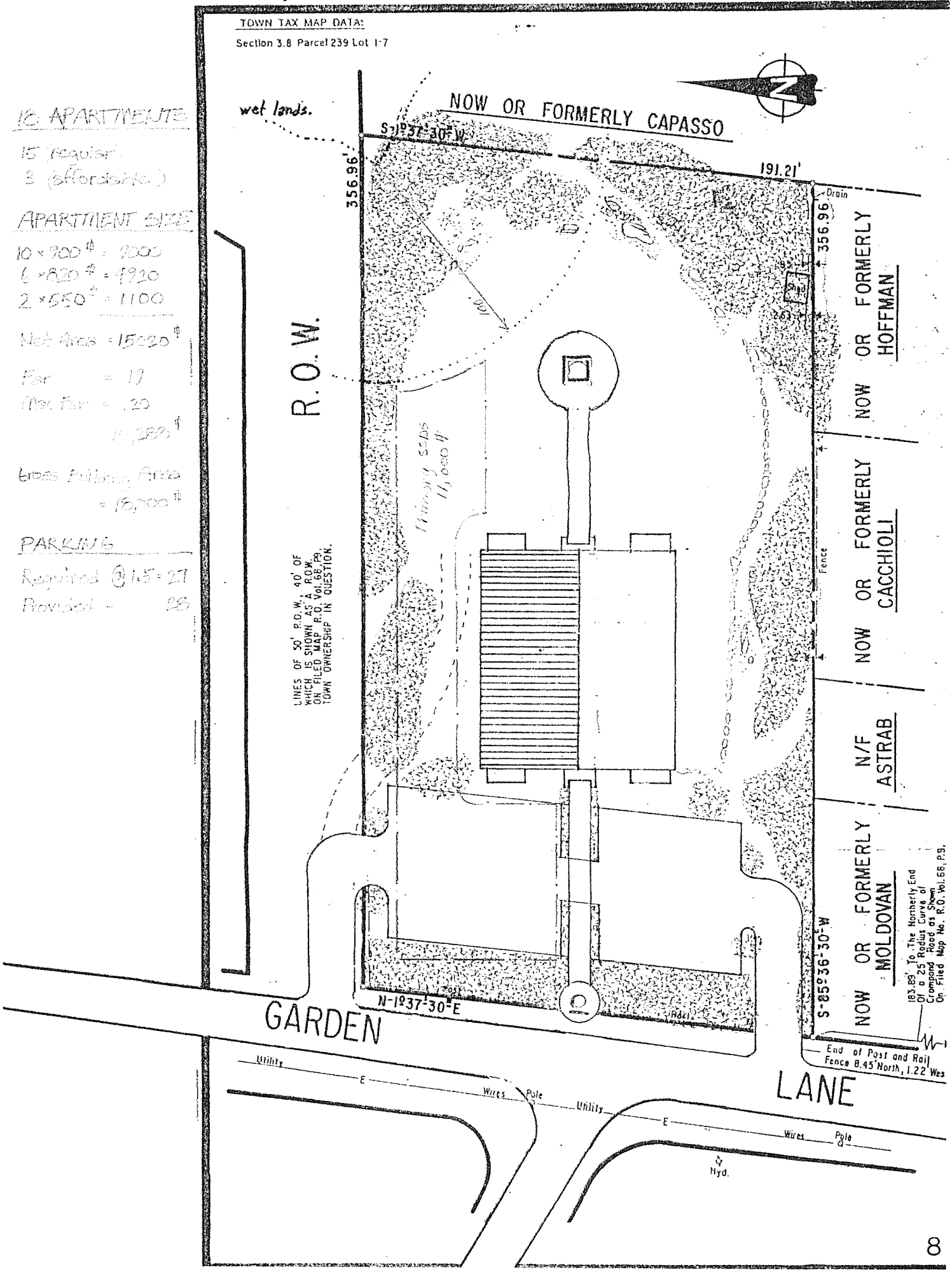

Site Presently

TITLE No.:

TOWN TAX MAP DATA:

Section 3.8 Parcel 239 Lot 1-7

wet lands.

Forested

NOW OR FORMERLY CAPASSO

S-1°37'-30" W

356.96'

191.21'

Drain

356.96'

1.558 Acres

(67,878 SF.)

105.4'

35'

Shed

2.63'

NOW OR FORMERLY HOFFMAN

R.O.W.

51.9'

44'

Shed

93.6'

NOW OR FORMERLY CACCHIOLI

Fence

DRIVE

57'

N/F ASTRAB

LINES OF 50' R.O.W., 40' OF WHICH IS SHOWN AS A R.O.W. ON FILED MAP R.O. Vol. 68, P9. TOWN OWNERSHIP IN QUESTION.

198.2'

DIRT

50'

N-85°36'-30" E

Post

N-1°37'-30" E

Rail

Fence

S-85°36'-30" W

NOW OR FORMERLY MOLDOVAN

183.89' To The Northerly End Of a 25' Radius Curve of Crompond Road as Shown On Filed Map No. R.O. Vol. 68, P.9.

191.21'

End of Post and Rail Fence 8.45' North, 1.22' West

GARDEN LANE

Utility E Wires Pole

Utility E Wires Pole

Hyd.

Topography

TITLE No.:

TOWN TAX MAP DATA:

Section 3.8 Parcel 239 Lot 1-7

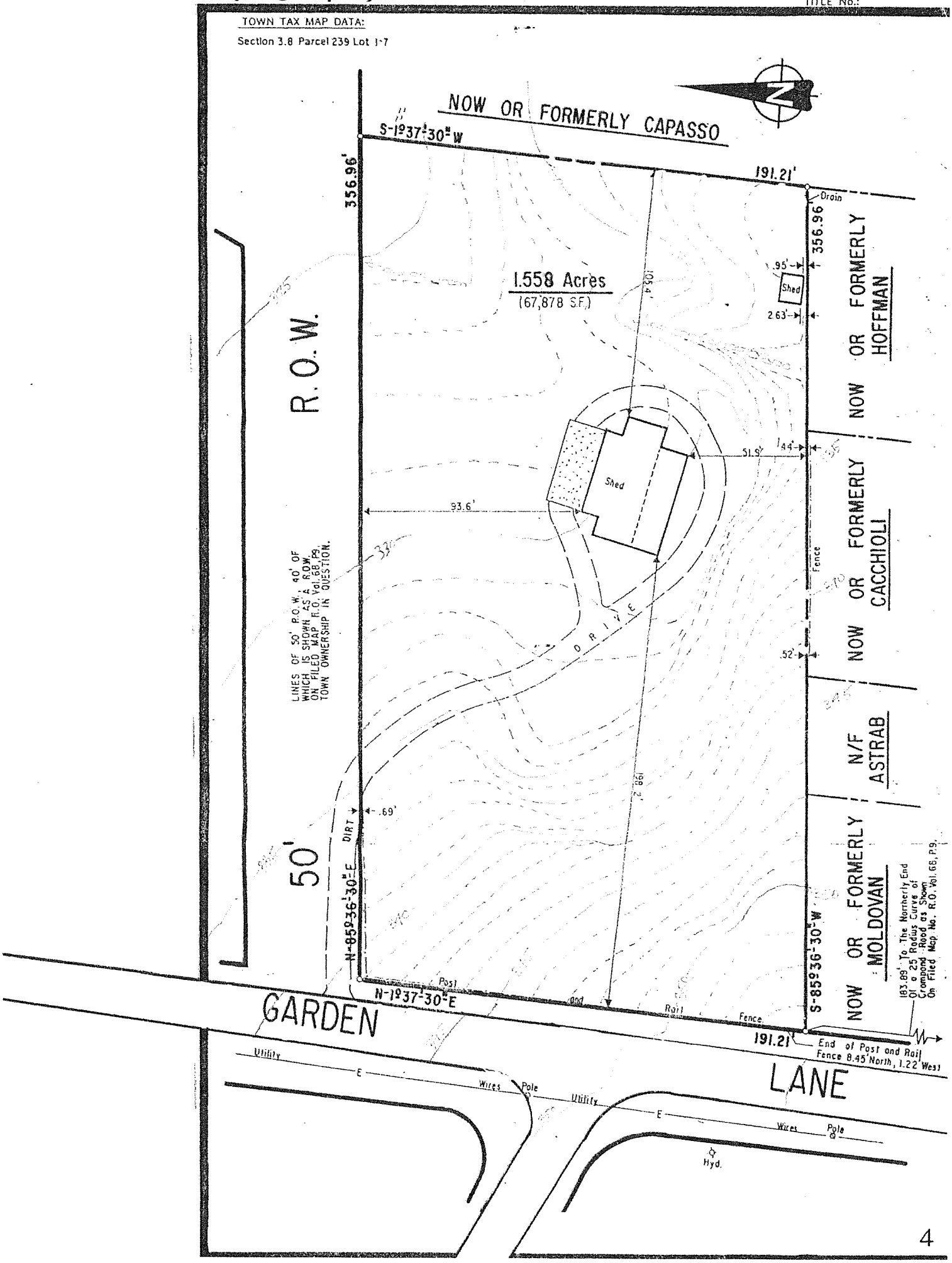

Site Absorption

TITLE No.:

Soils

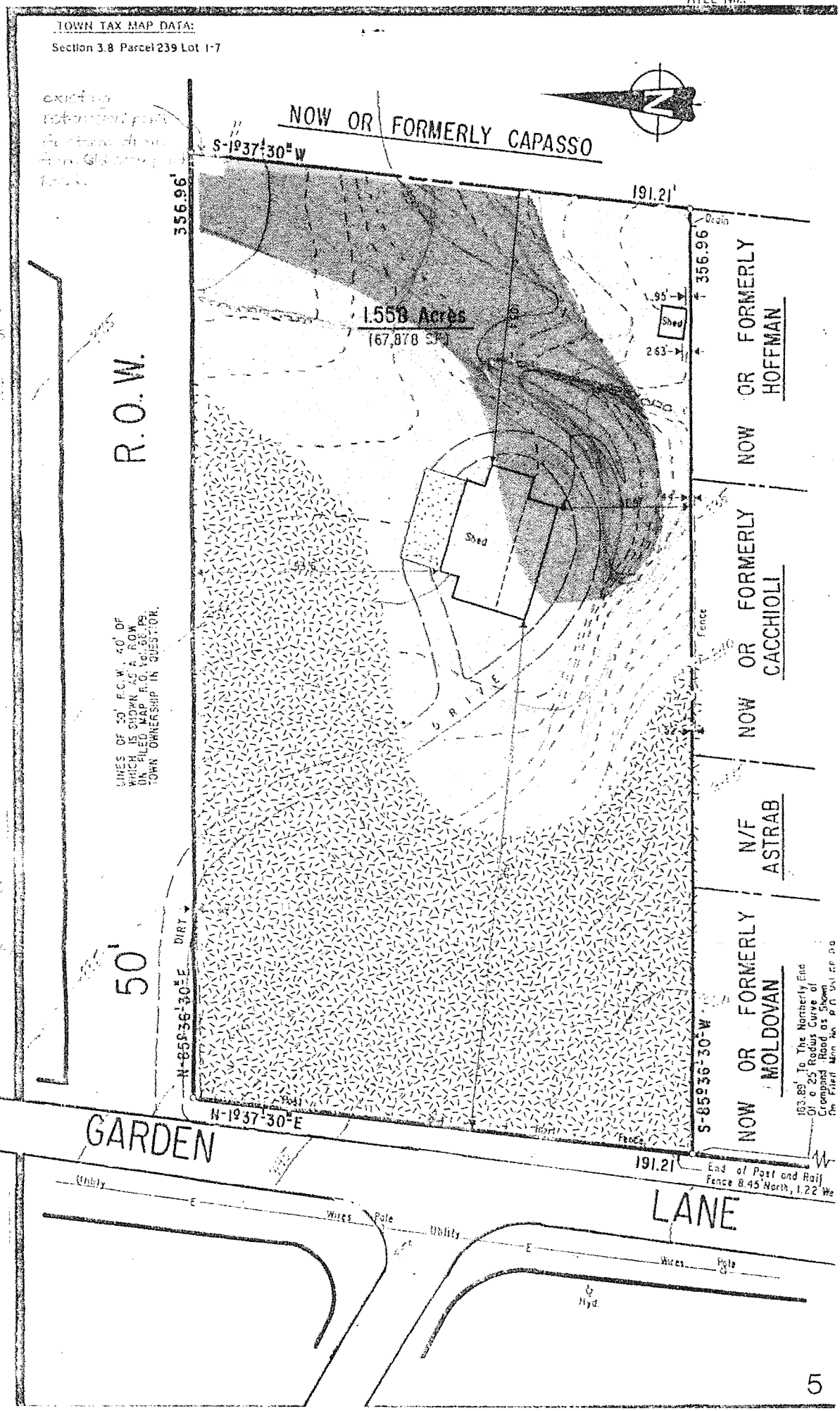

B. PROJECT DESCRIPTION. (P-1)

The project porposes , 18, one and two bedroom garden apartments with and average size of 880 sq. ft. Each apartment is to have a terrace or balcony overlooking a landscaped garden area with a water fountain. These apartments are to be housed in a single structure with a height of 34'-0" and a length and width of 80' x 90'. The proposal also includes 10,895 sq. ft. of paved parking area - enough for 28 automobiles

By allocating afforable rents, we believe this action will be a benefit to the town, It will allow young professionals and individuals working in the area the opportunity to live in Yorktown. The range of xpected rents will be $850.-to $950.-for2& 1 bedroom apartments, 10% of which will be allocated for affordable housing,renting for $ 745.-.per apartment.

All utilities for the project will have to be installed. Presently, there are no existing services. These utilities include sanitary, septic, water electric, gas, telephone and cable television. The anticipated period of construction is 10 to 12 months, all taking place in a single phase. We hope to start construction by late summer, 1990.

The unavoidable impacts which have been identified:

1. Increase in storm water run off.
2. Temporary and permanent removal of vegatation and soil cover.
3. Increased traffic volumes on Garden Lane and surrounding road networks. (28 cars/hr. max.).
4. Increase in noise and dust during construction.
5. Change in the existing visual character along Garden Lane.

The measures taken to mitigate the identified impacts:

1. enlargement of existing dentention pond to decrease storm water run off generated from the project, located in the north-east corner of the site.
2. Detailed soil erosion controls by creating landscaped garden areas.
3. Planting of evergreen buffer along Garden Lane.

ZONING AND PLANNING INFO.:

The proposal requires a zoning amendment from R1-20 (present zoning) to R-3. The R1-20 would allow for a maximum of 3 building lots on the site. The proposed amendment (R-3) would allow for a maximum of 19 apartments on the site. This action would be consistent with the use of the surrounding properties and the towns own development plan, which already has the area zoned as multi-family, (D-5).

Garden Lane is a connector between Old crompond Rd. and Rt. 202. The land use on the Rt. 202 half of Garden Lane is all commercial, with the Old Crompond Rd. half being multi-family. The proposed site is right in the middle of Garden Lane. It would seem to be in compliance with present zoning to rezone the proposed site to R-3. Not only would this be in harmony with what is already existing on Garden Lane, but also the rezoning would act as buffer by downgrading the land use gradually from commercial on Rt. 202 to multi-family on Garden Lane and finally residential on Old Crompond Rd.

The proposed action will require the County Health Dept.'s approval for septic disposal. A subsurface investigation was conducted on the site by Site Design Consultants (Joe Riino), who identified a substantial 50% of the site to consist of back-run. This soil type has very good absorbtion characteristics. It was calculated that it would require 9,000 sq. ft. of septic fields to accomodate the proposed 19 units.

Diagram (D-6) is one possible system which would meet the septic disposal requirements of the proposed project. This diagram also shows the dry sewer line which will connect into Cedar Ponds line on Garden Lane.

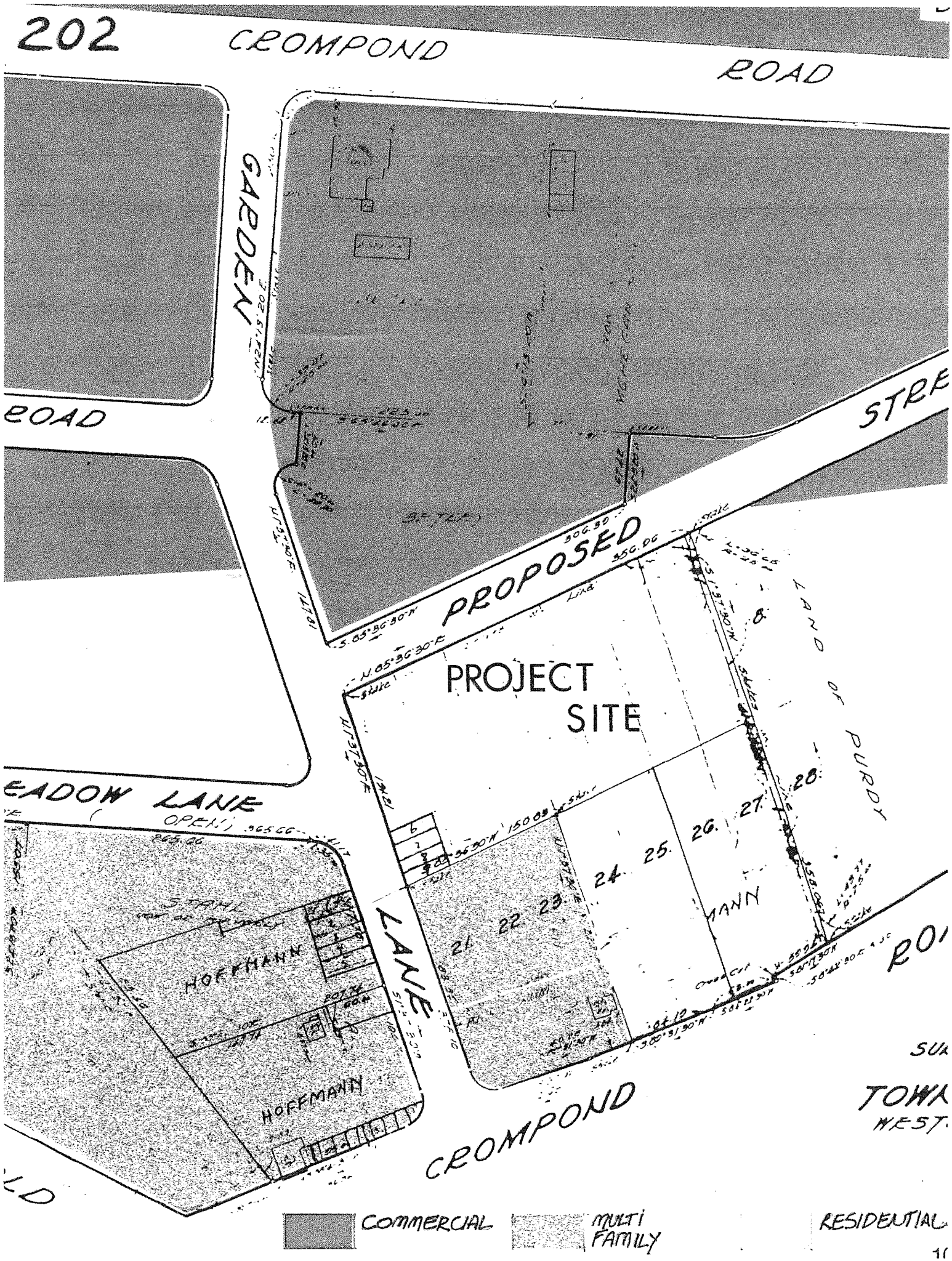
202
CROMPOND
ROAD
GARDEN
ROAD
STRE
PROPOSED
PROJECT
SITE
LAND OF PURDY
EADOW LANE
OPEN
HOFFMANN
HOFFMANN
LANE
CROMPOND
TOWN
WEST
COMMERCIAL
MULTI FAMILY
RESIDENTIAL

Septic System

TITLE No.:

TOWN TAX MAP DATA:
Section 3.8 Parcel 239 Lot 1-7

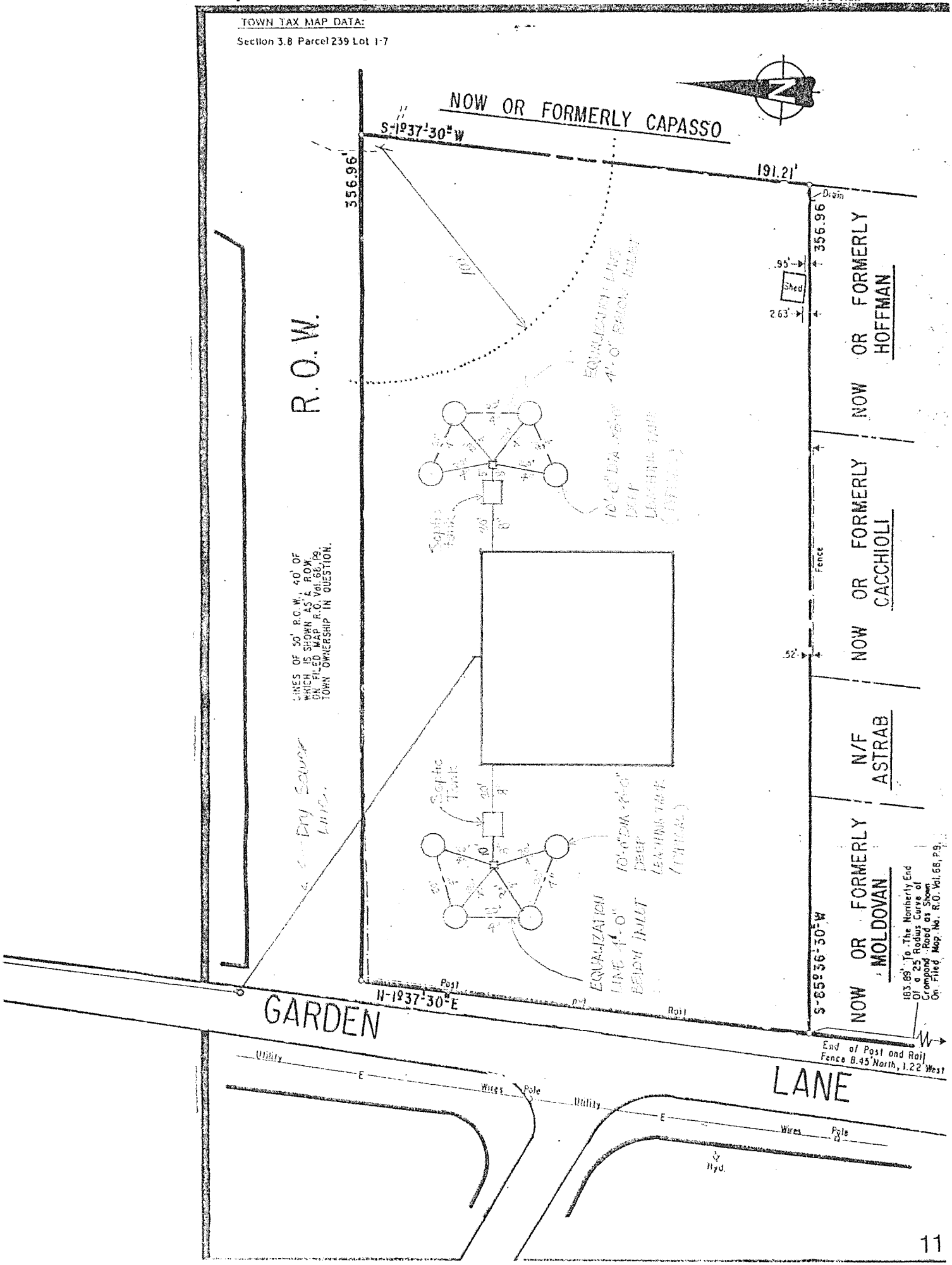

Dry Sewer Line

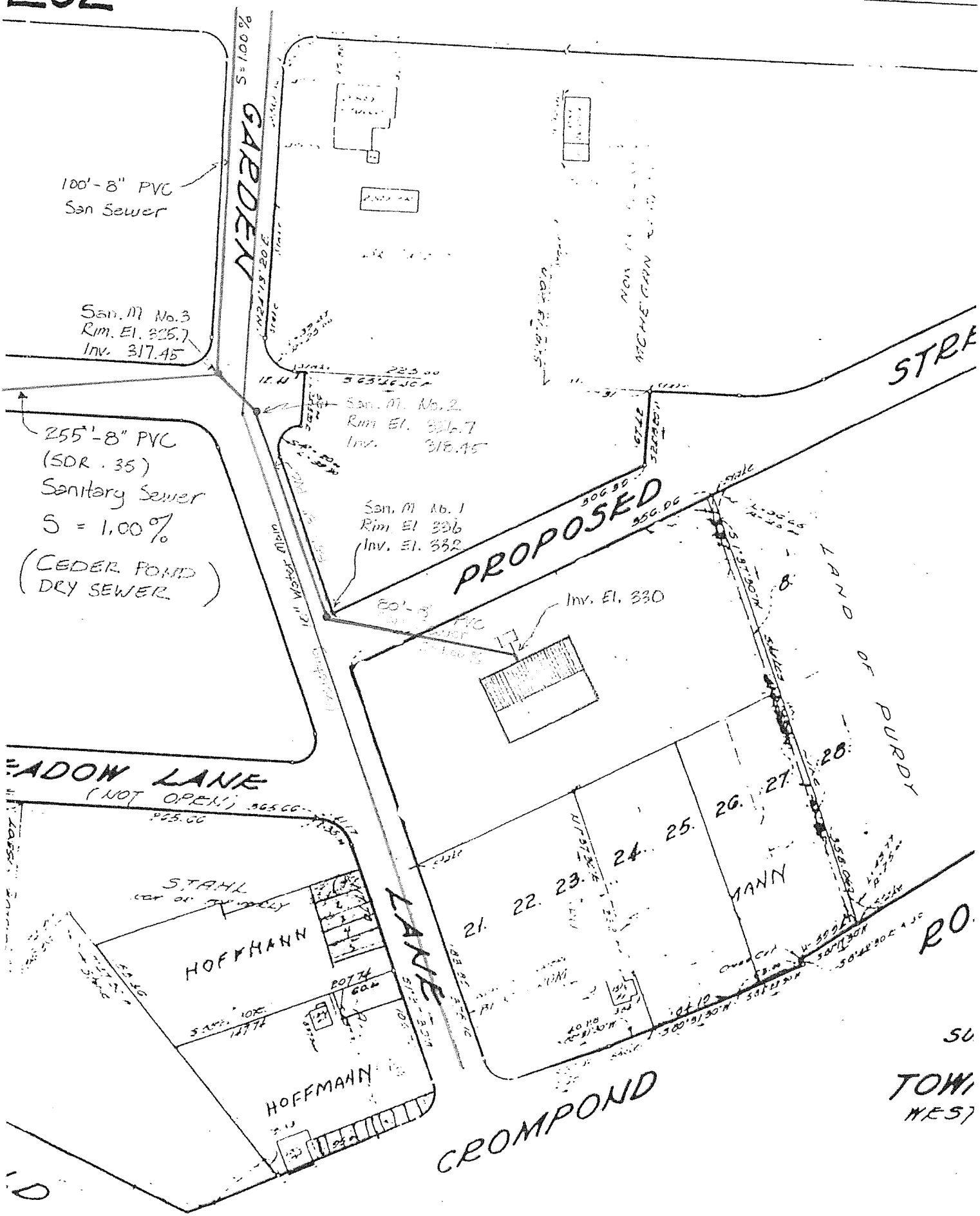

Alternatives :

R1-20 ½ acre zoning
3 building lots
(present zoning)

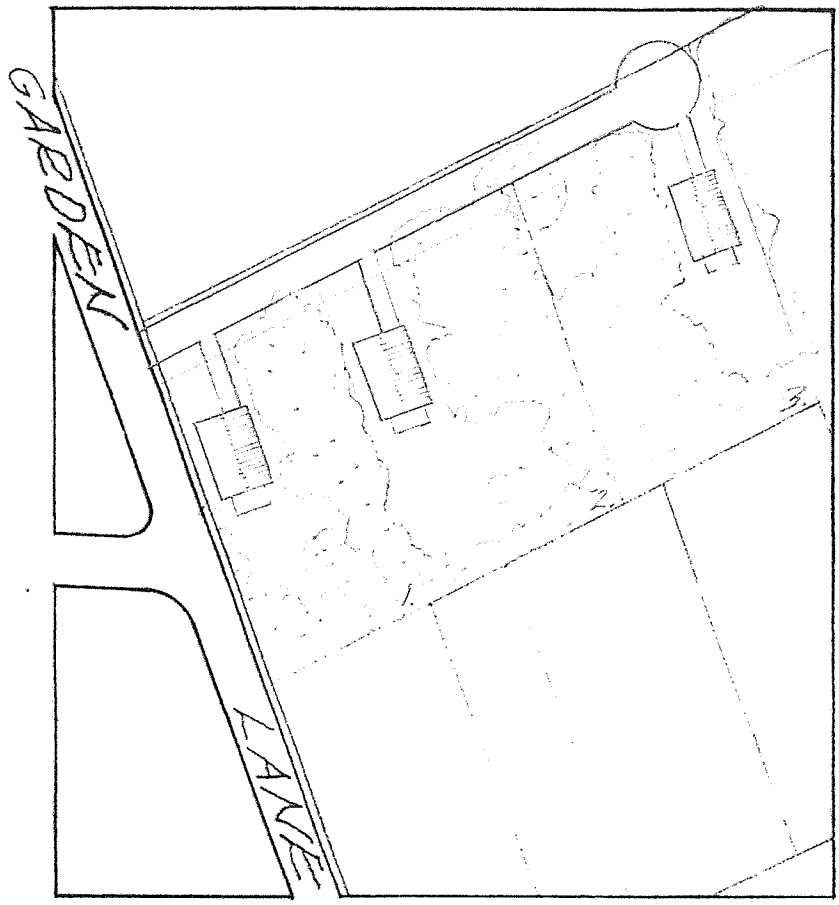

R-2 1/acre zoning
7 homes.

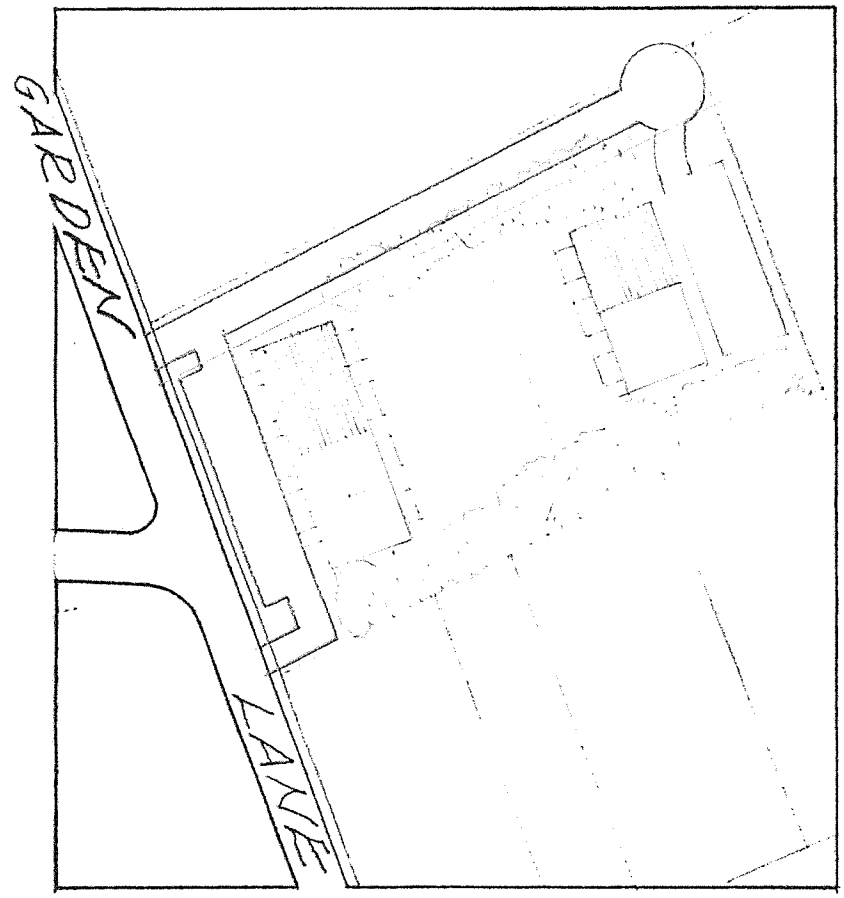

Alternatives :

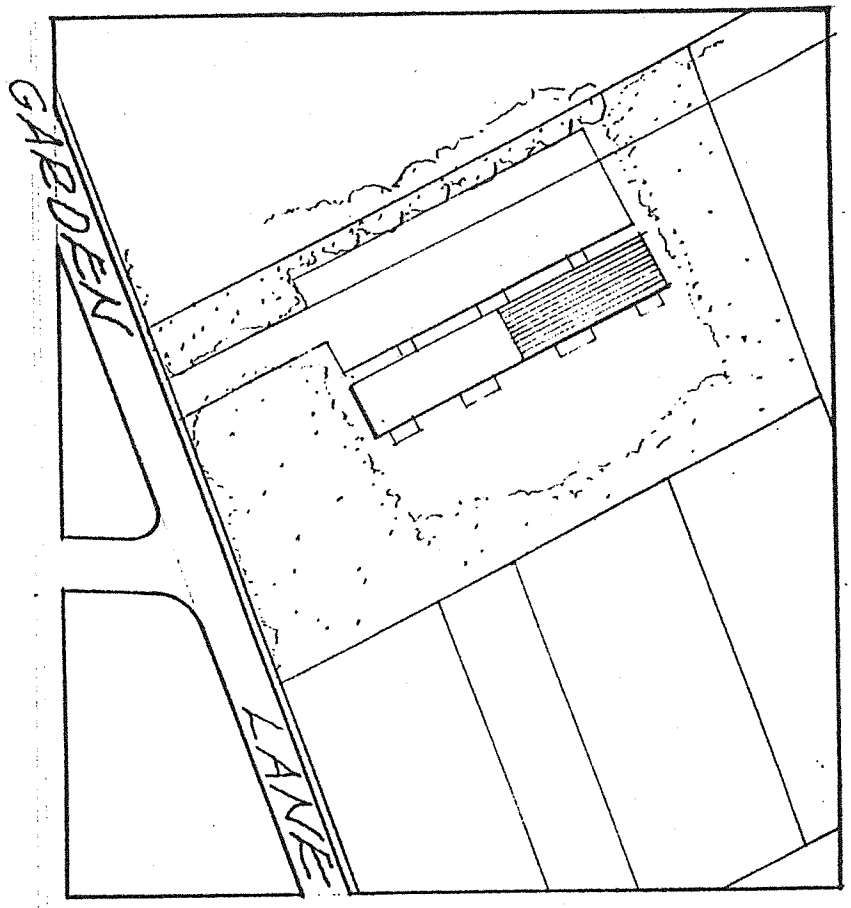

R2 - A 6/acre zoning
11 homes

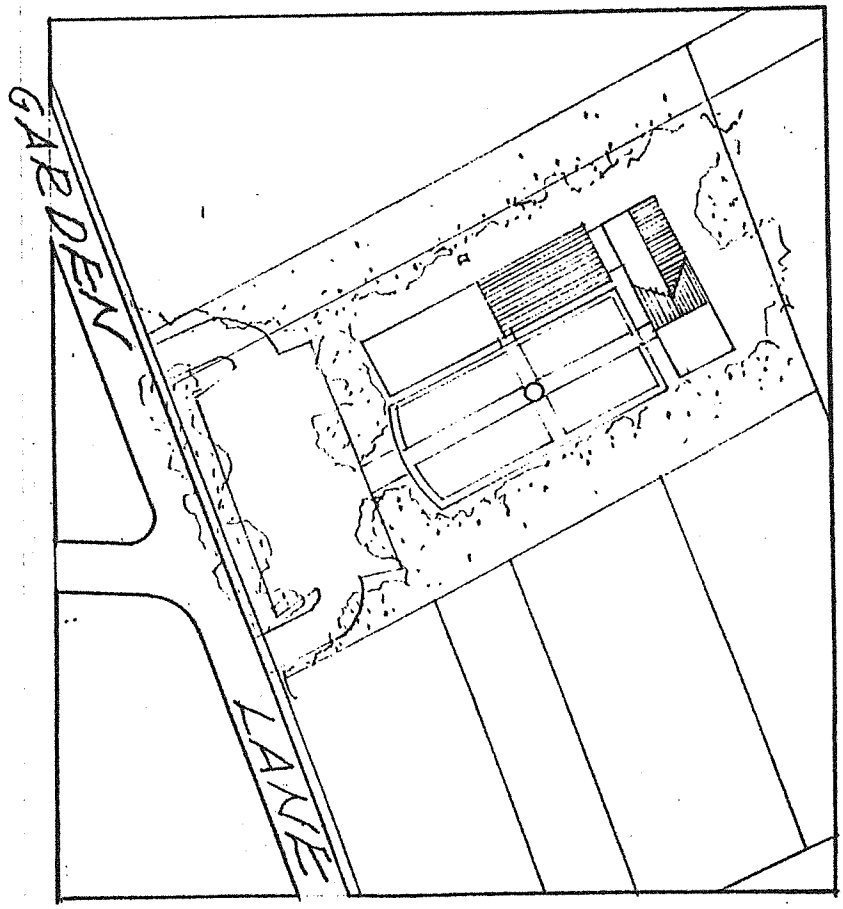

R3 20/acre zoning
10 per acre if there is no sewer. Which is the condition being proposed and designed for.

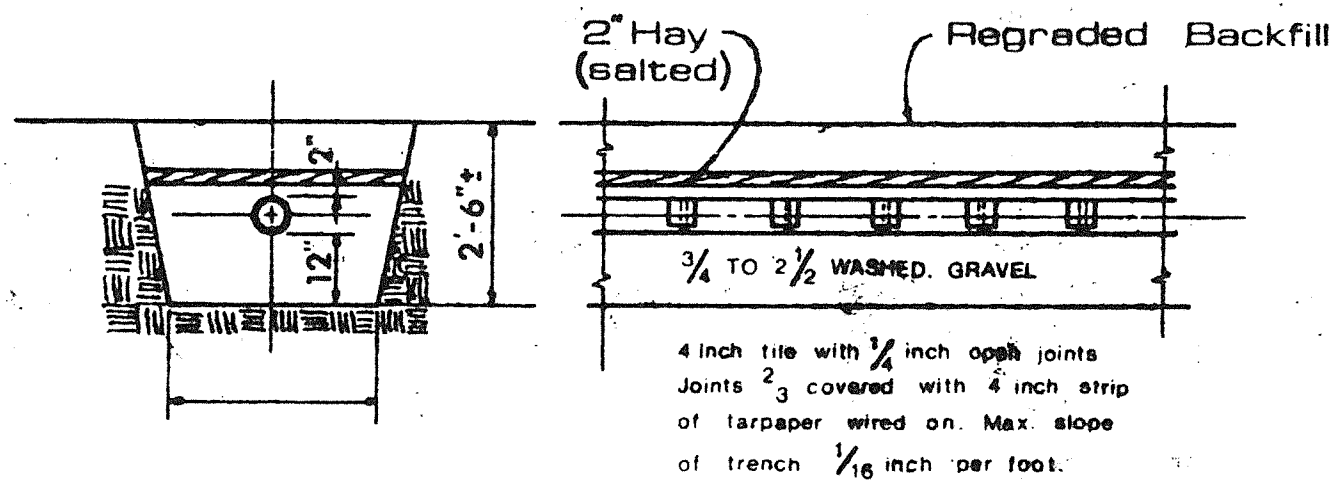

NOTE Contractor has option to use for sewer lines and drains the following materials Agricultural Clay Tile, Perforated Tile, Bituminized-fiber, Asbestos-Cement or Plastic Pipe with perforated holes.

ABSORPTION TRENCH

Scale: 3/8" = 1'-0"

Municipality: YORKTOWN County: WESTCHESTER
Subdivision:
Section: 3.08 Block: Lot: 15

Nicholas Scinicariello
Professional Engineer
Old Crompond Road
Peekskill, New York 10566

Owner:
ERICH HOFFMANN
[illegible]

Scale: Date: Job No. 8005

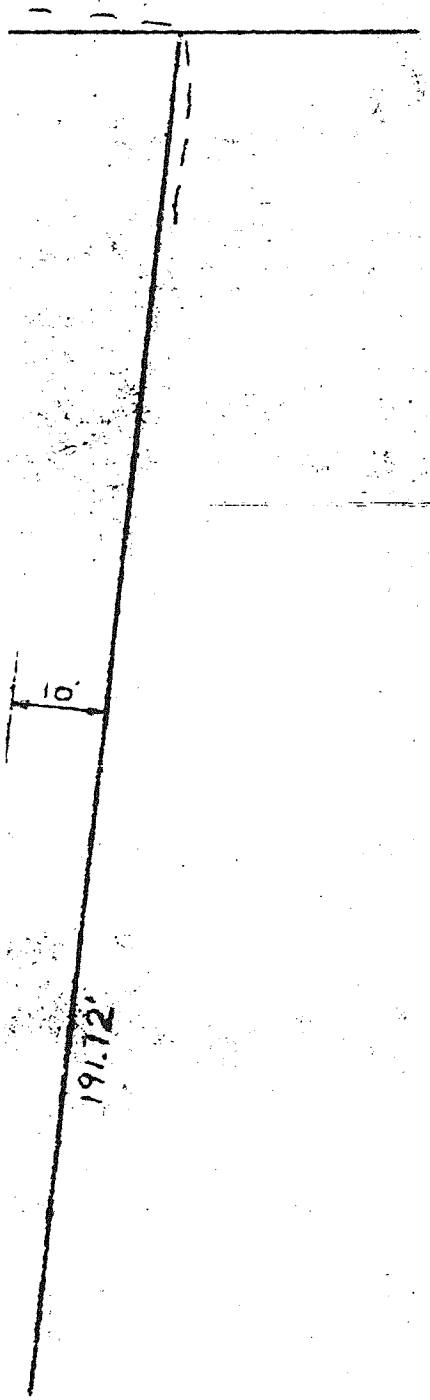

NOTE: Tank walls may be 8 inch block – waterproofed or an approved steel tank or cast in place concrete may be used

SEPTIC TANK (Precast)

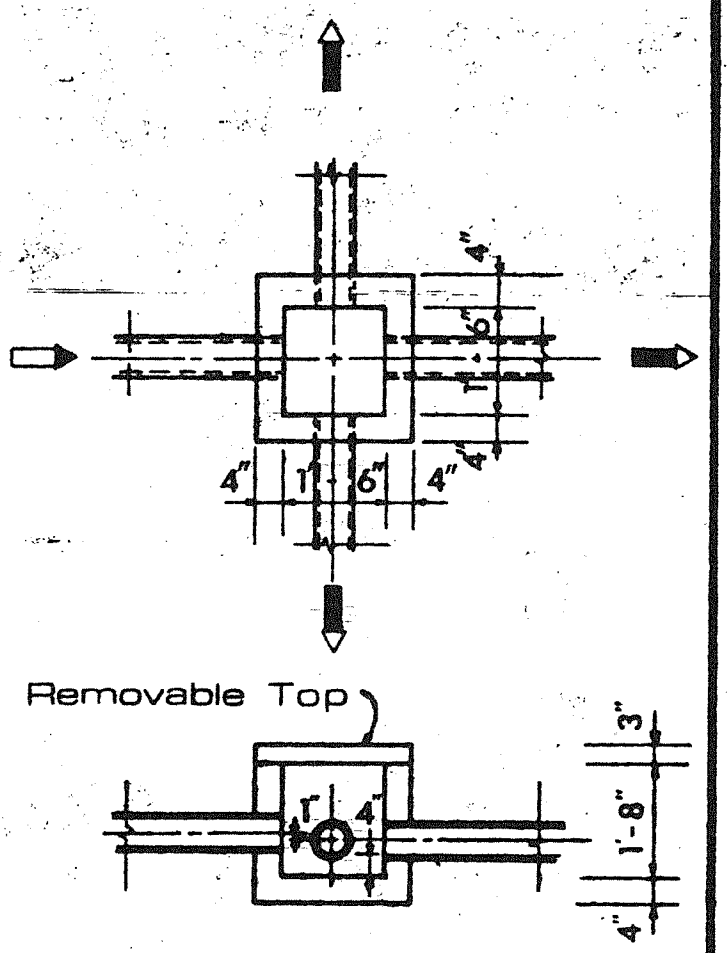

DISTRIBUTION BOX

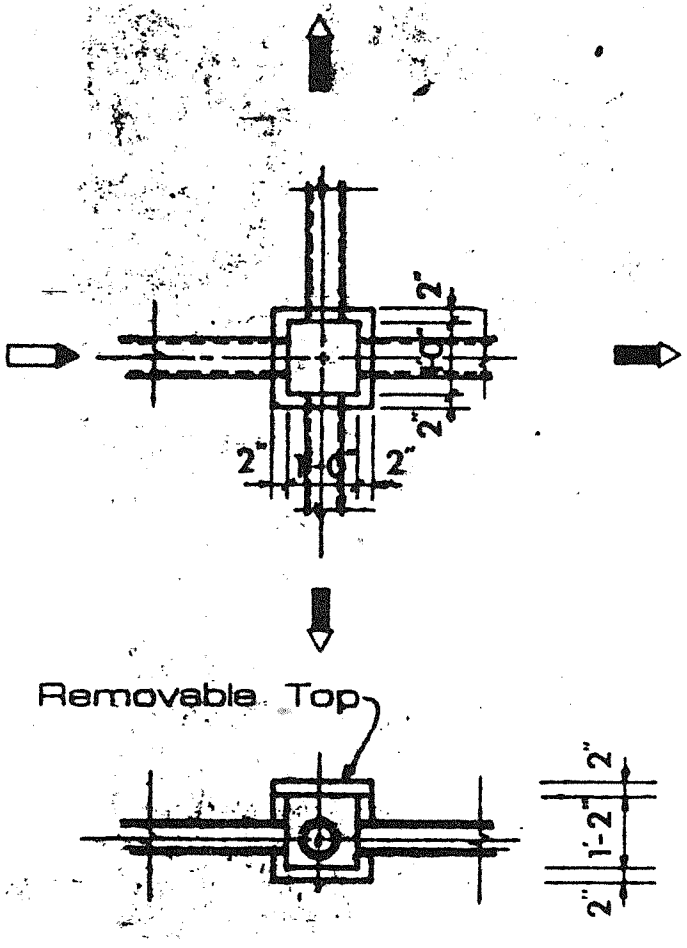

JUNCTION BOX

2" Hay (salted)

Regraded Backfill

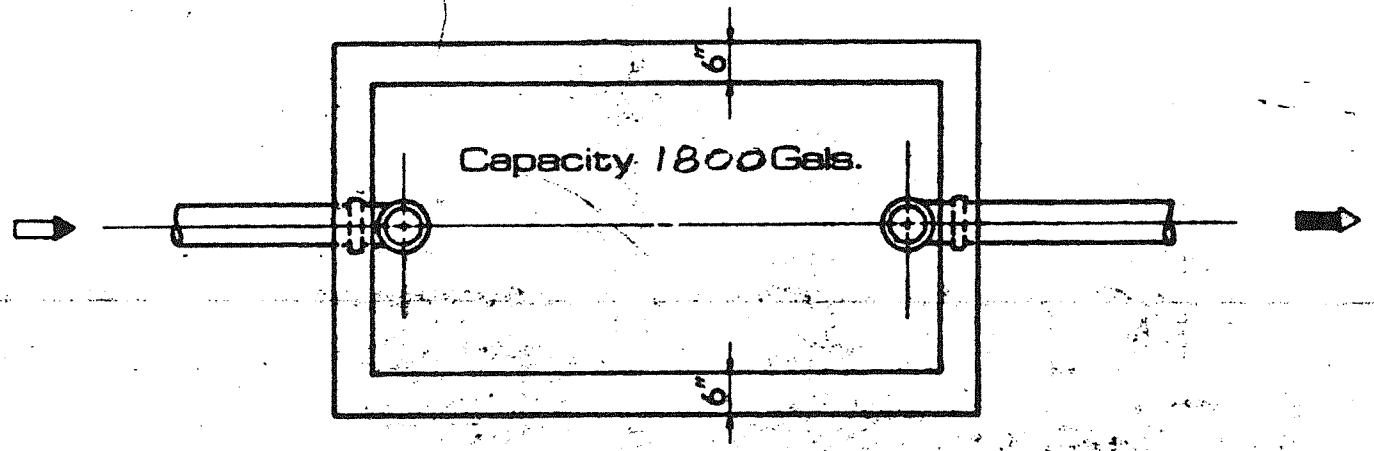

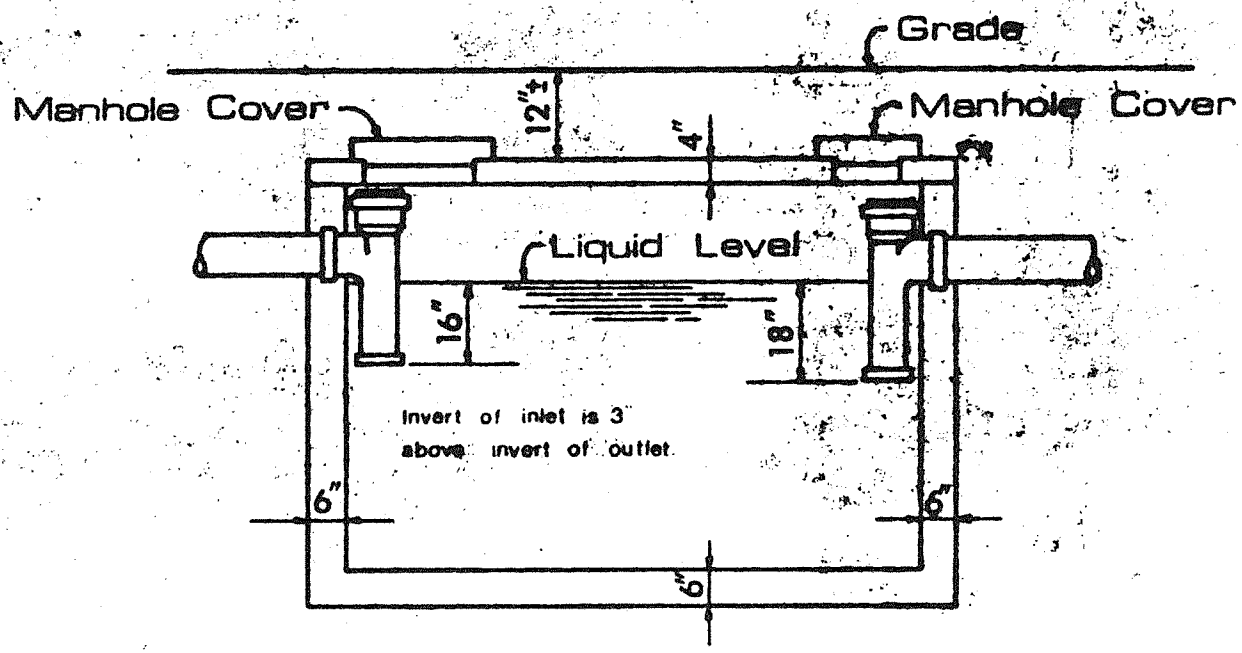

NOTE: Tank walls may be 8 inch block – waterproofed or an approved steel tank or cast in place concrete may be used